RAVELLI
il fuoco intelligente

USE AND MAINTENANCE MANUAL

RBC 8010
RBC 8012

INFORMATION ON SOLID FUEL HEATING APPLIANCES
According to Regulation (EU) n. 1185/2015

EN

Manufacturer	**Aico**
Model identifier(s)	**RBC 8012**
Brand	**Ravelli**
Indirect heating functionality	**No**
Direct heat output	**10,2 kW**
Indirect heat output	**kW**

Fuel type	Preferred fuel (only one):	Other suitable fuel(s):	ηs [x%]	Space heating emissions at nominal heat output (*)				Space heating emissions at minimum heat output (*) (**)			
				PM	OGC	CO	NOx	PM	OGC	CO	NOx
				[x] mg/Nm³ at 13%O2				[x] mg/Nm³ at 13%O2			
Wood logs with moisture content ≤ 25 %	No	No									
Compressed wood with moisture content < 12 %	Yes	No	83,6	11,1	2	49	76	15,7	4	257	61

Characteristics when operating with the preferred fuel only					
Item	**Symbol**	**Value**	**Unit**	**Type of heat output/room temperature control (select one)**	
Heat output				single stage heat output, no room temperature control	No
Nominal heat output	P_{nom}	10,2	kW	two or more manual stages, no room temperature control	No
Minimum heat output (indicative)	P_{part}	3,0	kW	with mechanic thermostat room temperature control	No
Useful efficiency (NCV as received)				con controllo elettronico della temperatura ambiente	No
Useful efficiency at nominal heat output	$\eta_{th,nom}$	88,0	%	with electronic room temperature control plus day timer	No
Useful efficiency at minimum heat output (indicative)	$\eta_{th,part}$	93,1	%	with electronic room temperature control plus week timer	Yes
Auxiliary electricity consumption				**Other control options (multiple selections possible)**	
At nominal heat output	el_{max}	0,090	kW	room temperature control, with open window detection	No
At minimum heat output	el_{min}	0,048	kW	room temperature control, with presence detection	No
In standby mode	el_{SB}	0,002	kW	with distance control option	No

(*) PM = particulate matter, OGCs = organic gaseous compounds, CO = carbon monoxide, NOx = nitrogen oxides
(**) Only required if correction factors F(2) or F(3) are applied

Model **RBC 8012** (1)

P_{nom}	10,2 kW	P_{part}	3 kW
$P_{SH\,nom}$	10,2 kW	$P_{SH\,part}$	3 kW
$P_{W\,nom}$	-- kW	$P_{W\,part}$	-- kW
η_{nom}	88 %	η_{part}	93 %
$CO_{nom(13\%O2)}$	49 mg/Nm³	$CO_{part(13\%O2)}$	257 mg/Nm³
$NO_{x\,nom(13\%O2)}$	76 mg/Nm³	$NO_{x\,part(13\%O2)}$	61 mg/Nm³
$OGC_{nom(13\%O2)}$	2 mg/Nm³	$OGC_{part(13\%O2)}$	4 mg/Nm³
$PM_{nom(13\%O2)}$	11 mg/Nm³	$PM_{part(13\%O2)}$	16 mg/Nm³
p_{nom}	11 Pa	p_{part}	10 Pa
p_w	-- kPa (-- bar)	T_{class}	T200G
T_{snom}	181 °C	W_{max}	420 W
E	230 V	f	50 Hz

(2)

Funzionamento Continuo
Continuos operation
Fonctionnement Continu
Funcionamento Continuo
Continue Werking
kontinuierlicher Betrieb

(CON) (3)

Distanza minima da materiali combustibili
Minimum distance from combustible materials
Distance minimale par rapport aux matériaux combustibles
Distancia mínima de materiales combustibles
Minimumafstand tot brandbare materialen
Mindestabstand zu brennbaren Materialien

d_R	221 mm
d_S	190 mm
d_C	750 mm
d_P	2000 mm
d_F	1500 mm
d_L	1500 mm
d_B	300 mm

(4)

Usare solo il combustibile raccomandato:
Use only reccomended fuel:
Utilizer seulement les combustibles recomandés:
Use solo el combustible recomandado:
Gebruik alleen de aanbevolen brandstof:
Nur empfohlenes Brennmaterial verwenden:

Pellet di legno
Wood pellet
Granulee de bois
Pellet de madera
Houtpellet
Holzpellets
Ø 6 mm

(5)

L'apparecchio non è adatto al funzionamento in una canna fumaria condivisa / The appliance is not suitable for operation in a shared chimney / L'appareil n'est pas adapt à une utilisation dans une chemin partage' / El aparato no es apto para funcionar en una chimenea compartida / Het apparaat is niet geschikt voor gebruik in een gedeelde schoorsteen / Das Ger t ist nicht f ü r den Betrieb in einem gemeinsamen Kamin geeignet.

(6)

Leggere e seguire le istruzioni per l'uso / Read and follow the operating manual / Lire et suivre le mode d'emploi / Leay respete le manual de operacion / Lees en volg de handleiding voor bediening / Bitte lesen und befolgen Sie die Montage und Nutzungsanweisungen

(7)

(8) D.o.P. n° (Notified Body **0051**)

(9) **EN 16510-1:2022; EN 16510-2-6:2022**

(10) Type: **BE**

(11) Year of production: 2025

(12)

CE 25

RAVELLI
il fuoco intelligente

AICO S.r.l. - Via Consorzio Agrario, 3/D - 25032 Chiari (BS) - Italy

C299U1001

(13) (14) (15)

EXPLANATION OF THE IDENTIFICATION PLATE

1 Type, number or model designation to identify the product

2 **Table of values:**

P_{int}	Maximum input power	$P_{int\ part}$	Partial input power
P_{nom}	Nominal heat output	P_{part}	Partial heat output
$P_{SH\ nom}$	Nominal heat output to air	$P_{SH\ part}$	Partial heat output to air
$P_{W\ nom}$	Nominal heat output to water	$P_{W\ part}$	Partial heat output to water
η_{nom}	Appliance efficiency at nominal heat output	η_{part}	Efficiency of the appliance at partial heat output
CO_{nom}	CO emissions at 13% oxygen content at nominal heat outputossigeno alla potenza termica nominale	CO_{part}	CO2 emissions at 13% oxygen content at partial heat output
$NO_{x\ nom}$	NOx emissions at 13% oxygen content at nominal heat output	$NO_{x\ part}$	NOx emissions at 13% oxygen content at partial heat output
OGC_{nom}	Hydrocarbon emissions at 13% oxygen content at nominal heat output	OGC_{part}	Hydrocarbon emissions at 13% oxygen content at partial heat output
PM_{nom}	Particulate emissions at 13% oxygen content at nominal heat output	PM_{part}	Particulate matter emissions at 13% oxygen content at partial heat output
p_{nom}	Minimum flue draught at nominal heat output	p_{part}	Minimum flue draught at partial heat output
$p_{W\ nom}$	Minimum flue draught at nominal heat output	T_{class}	Chimney designation according to the appropriate chimney standard
$T_{s\ nom}$	Flue outlet temperature at nominal heat output	$T_{fg\ nom}$	Flue gas temperature at nominal power
W_{max}	Maximum electrical power absorbed	E	Supply voltage
f	Frequency		

3 Product operation type

4 **Minimum distance from combustible materials:**

d_R	Minimum distances from the rear to flammable material	221 mm
d_S	Minimum distances from the sides to flammable material	190 mm
d_C	Minimum distances from the top to flammable material	750 mm
d_P	Minimum distances from the front to flammable material	2000 mm
d_F	Minimum distances from the front to flammable material	1500 mm
d_L	Minimum distances from the front to flammable material	1500 mm
d_B	Minimum distances from the bottom (excluding the feet) to flammable material	300 mm

5 Recommended fuels

6 Warning

7 Warning

8 Document number DOP and (Notified Body)

9 Applicable standards

10 Product classification

11 Year of production

12 Environmental classification

13 CE conformity mark - The numbers indicate the year of issue of the certificate

14 Serial number

15 Registered trademark

Preface

Dear Customer, We would like to thank you for choosing one of our stoves.

We invite you to read this manual carefully, before starting installation and use, so that you are able to benefit from all of its characteristics better and in full safety. It contains all necessary information for correct installation, start-up, operation, cleaning, maintenance, etc.

Keep this manual in a suitable location, do not discard it without reading it.

Incorrect installation, maintenance and improper use of the product relieve the Manufacturer of all liability deriving from use of the stove.

For further information and requirements contact your Ravelli-authorised Technical Assistance Centre.

All rights reserved. No part of this instructions manual can be reproduced or transmitted through any electronic or mechanical means, including photocopies, recordings or any other storage system, for other purposes that are not exclusively use by the buyer's staff, without the express written consent of the Manufacturer.

SUMMARY

CE LABEL 4

Preface 7

IDENTIFICATION 10
Stove identification 10
Manufacturer identification 10
Reference standards 10
Remote control: Summary Declaration of Conformity (DoC) 10

WARRANTY 11
Certificate of warranty 11
Warranty conditions 11
Registration of warranty 11
Info and problems 11

GENERAL INFORMATION 12
Supply and safe-keeping 12
Language 12
Symbols used in the manual 12

SAFETY MEASURES 12
General safety warnings 12
Residual risks 13

DESCRIPTION OF THE STOVE 13
Intended use 13
Reasonably foreseeable incorrect use 14
Obligations and forbidden actions 14
Obligations 14
Forbidden actions 14
Characteristics of the fuel 16
Non-permitted fuels 16

TECHNICAL CHARACTERISTICS 17
RBC 8010 - RBC 8012 technical diagram 17
Minimum distance from flammable materials 17

SHIPPING AND INSTALLATION 18
Safety warnings for transportation and installation 18
Packaging 18
Set-ups for the smoke evacuation system 19
Chimney 19
Chimney pot 19
Requirements for the installation premises 20

CONNECTIONS 24
Testing and commissioning 24
Electric scheme 25
Controls and use 26
Description of the display 27
The display is subdivided into three parts: 28
Time and date setting 28

PROCEDURES FOR USE 29
Checks prior to start-up 29
Switching the appliance on and off 29
Failed ignition 29
Hot air outlet flow adjustment 29
Turning the device on 30
Sequence of ignition phases 30
What happens if the batteries are empty? 30

OPERATING PHASES OF THE APPLIANCE **31**
Modulation *31*
Description of menu functions *32*
Settings *35*
Stove phase synthetical layout *36*
Warning Pop-Up *37*
Alarms (table with reference codes) *37*

MAINTENANCE **39**
Safety warnings for maintenance *39*
Cleaning *39*
Smoke conduit cleaning *40*
Extraordinary maintenance *40*
To clean the combustion chamber, proceed as follows: *41*

STORAGE AND DISPOSAL **42**
Disposal *42*

TROUBLESHOOTING **42**
The stove does not work *42*
Difficult lighting *42*
Smoke leakage *42*
The glass gets dirty easily *42*
Downtime (end of season) *42*

TECHNICAL DATA **43**

IDENTIFICATION

Stove identification

Type of product	PELLET STOVE
Model	RBC 8010 RBC 8012

Manufacturer identification

Manufacturer	Aico S.r.l. Via Consorzio Agrario, 3/D - 25032 Chiari (BS) - Italy T. + 39 030 7402939 info@ravelligroup.it www.ravelligroup.it

Reference standards

The RBC 8010- RBC 8012 stoves that this manual refers to are compliant with the regulation:
305/2011, CONSTRUCTION PRODUCT REGULATION
And observe the following harmonised standard:
EN 16510-1; EN 16510-2-6; EN 55014-1; EN 55014-2; EN 61000-3-2; EN 61000-3-3; EN 60335-1; EN 60335-2-102; EN 62233; EN 50581; ETSI EN 300220-1
All local laws, including national and European standards, must be followed for the installation of the appliance.

Remote control: Summary Declaration of Conformity (DoC)

The manufacturer, Aico S.r.l., declares that the Ravelli brand remote control, model 55441 (Palmare Touch), complies with the relevant EU harmonization legislation: 2015/53/EU CE, Radio Equipment Directive, and that the following harmonized standards and/or technical specifications have been applied: ETSI EN 301 489-3, ETSI EN 301 489-1, EN 60950-1 A11+A1+A12+AC+A2, EN 62479.
These declarations can be found in full on the website www.ravelligroup.it

WARRANTY

Certificate of warranty

Ravelli thanks you for the trust granted with the purchase of one of its products and invites the purchaser to:

- read the installation, use and maintenance instructions for the product;
- read the warranty conditions contained below.

Warranty conditions

The warranty for the Customer is acknowledged by the Dealer under the terms of law.
The Dealer acknowledges the warranty only if the product has not been tampered with and only if it has been installed in accordance with the Manufacturer's instructions.
The limited warranty covers manufacturing material defects, as long as the product has not broken sue to an incorrect use, negligence, incorrect connection, tampering, installation errors.
The warranty becomes null and void even if only one requirement in this manual is not complied with.
The following are not covered by warranty:

- the combustion chamber refractory stones;
- the door glass;
- the gaskets;
- the paint job;
- the stainless steel or cast iron combustion grille;
- the resistance;
- the Majolica cladding;
- the aesthetic parts;
- any damages caused by unsuitable installation and/or use of the product and/or shortcomings on the part of the customer.

The use of poor quality pellet or any other unauthorised fuel may damage the product's components, cause its warranty to be voided and as a result eliminate the connected manufacturer liability.
It is therefore recommended to use good quality pellet that fulfils the requirements listed in the dedicated chapter.
All damages caused by transportation are not recognised, for this reason it is recommended to carefully check goods upon receipt, immediately warning the reseller of any damage.

Registration of warranty

To activate the warranty, it is necessary to register the product on the Guarantee Portal on the website www.ravelligroup.it, by entering your data and the purchase receipt.

Info and problems

Dealers authorised by Ravelli use a trained Technical Service Centre network to meet the Customer's requirements. For any information or request for assistance, please contact your Dealer or the Technical Service Centre.

GENERAL INFORMATION

Supply and safe-keeping
The manual is supplied in printed format.
Keep this manual safe, with the stove, so that the user can consult it easily.
The manual is an integral part, for safety reasons, therefore:
- **it must be kept intact** (in full). If it gets lost or ruined it is necessary to immediately ask for a new copy:
- **it must be kept with the stove until demolition** (including relocation, sale, rental, lease, etc....).

The Manufacturer will not be held liable for improper use of the stove and/or damage caused by operations that are not set forth in the technical documentation.

Language
The original manual was written in Italian.
Any translations into additional languages must be carried out based on the original instructions.
The Manufacturer is liable for the information contained in the original instructions; the translations into different languages cannot be fully verified therefore if any inconsistency arises it will be necessary to follow the text in the original language or contact our Technical Documentation Office.

Symbols used in the manual

symbol	*definition*
! IMPORTANT	***This symbol is used to identify particularly important information in the manual. This information also concerns the safety of users involved in using the stove.***

SAFETY MEASURES
General safety warnings

! IMPORTANT

Read this instructions manual carefully before stove installation and use. Failure to observe the instructions set forth herein can void the warranty and/or cause damage to property and/or people.

⚠ **Stove installation, system verification, operation verification and initial calibration must be carried out exclusively by qualified and authorised staff.**

⚠ **The stove needs to be connected to a single chimney that guarantees the draught declared by the Manufacturer and observes the installation regulations that apply to the installation site.**

⚠ **The room where the stove is installed must have an air intake.**

⚠ **The stove must not be used as an incinerator or differently from its purpose**

⚠ **Do not use any fuel other than fire pellet. It is strictly forbidden to use liquid fuels.**

⚠ **It is prohibited to use the stove with the door or ash drawer open or the glass broken.**

Do not touch the hot surfaces of the stove without suitable protective equipment, to avoid getting burned. When it is running, the outer surfaces reach hot temperatures to the touch.

It is forbidden to make unauthorised changes to the stove.

Before using the stove it is necessary to know the position and function of the controls.

If the chimney catches fire you must call the fire brigade.

Only use original spare parts. Any tampering and/or replacements that have not been authorised by Ravelli can pose a danger to the user's safety.

In the event of particularly adverse weather conditions, the safety systems could intervene and switch off the stove. In any case, doe not disable the safety systems.

Residual risks

The stove was designed so as to guarantee the user's essential safety requirements.
Safety was integrated into the stove's design and construction as much as possible.
For every residual risk there is a description of the risk and the zone or part that is applies to (unless the risk applies to the entire stove overall). Procedure-related information is also provided on how to avoid the risk and on the correct use of the personal protective equipment required by and made compulsory by the Manufacturer.

DESCRIPTION OF THE STOVE

Intended use

The appliance in question is intended for:

operation	allowed fuel	forbidden	setting
Radiant and convection heating, by burning:	pellet	Any fuel other than the permitted ones.	Residential or Commercial

The stove is designed and built to work safely if:

- it is installed by qualified staff according to the specific standards;
- it is used within the limits declared in the contract and herein;
- the operating manual procedures are followed;
- routine maintenance is carried out according to the times and methods set forth;

- extraordinary maintenance is promptly carried out when needed;
- safety devices are not removed and/or bypassed.

! IMPORTANT **This stove must be intended for the use it was specifically designed for.**

Reasonably foreseeable incorrect use

Reasonably foreseeable incorrect use is listed below:
- using the stove as an incinerator;
- using the stove with fuel other than pellet;
- using the stove with liquid fuels;
- using the stove with the door open and the ash drawer out.

Any use of the appliance other than intended must be preventively authorised in writing by the Manufacturer. Without said written authorisation, the use is considered “improper”. Any contractual and non-contractual liability of the manufacturer is excluded for damages to persons, animals or property due to installation and maintenance adjustment errors and improper use.

Obligations and forbidden actions

Obligations

The user must:
- read this instructions manual before performing any operation on the stove;
- the appliance must not be used by children under the age of 8 or by people with reduced physical, sensorial or mental capacities or without experience or without the necessary knowledge, and always with supervision;
- do not use the stove improperly, i.e. for uses other than those described in the “INTENDED USE” paragraph;
- it is strictly forbidden to use liquid fuels;
- keep objects that are not heat and/or flame-resistant at a safe distance;
- only and exclusively load the stove with pellet with the characteristics described herein;
- connect the stove to a regulation chimney;
- connect the stove to the extraction system by a pipe or outdoor air intake;
- always perform maintenance with the stove off and cold;
- perform cleaning activities at the frequency stated herein;
- use original parts recommended by the Manufacturer.

Forbidden actions

The user must never:
- remove or change the safety devices without authorisation;
- perform operations or manoeuvres of his/her own initiative that are not part of his/her job description, meaning that he/she might

jeopardise his/her own safety and that of others;
- use fuels other than pellet and those allowed for lighting;
- use the stove as an incinerator;
- use flammable or explosive substances near the stove during operation;
- use the stove with the door open and/or with the glass ruined or broken;
- close the combustion air and smoke outlet openings, whatsoever;
- use the stove to dry laundry;
- replace or change some of the stove parts.

Characteristics of the fuel

Wood pellet is a fuel made of pressed wood sawdust, often recovered from processing scraps of carpentries. The material used cannot contain any extraneous substance such as, for example, glue, lacquer or synthetic substances.
The sawdust, once it has been dried and cleaned from impurities, is pressed using a die with holes: as a result of high pressure, the sawdust heats up by activating the natural wood binders; this way the pellet maintains its shape even without adding artificial substances.
Wood pellet density varies based on the type of wood and can exceed that of natural wood by 1.5 - 2 times.
The cylinders have a diameter of 6 mm and a variable length between 10 and 40 mm.
Their density is equal to approximately 650 kg/m^3. Due to their low water content (< 10%) they have a high energy content.
The UNI EN ISO 17225-2:2014 standard (that replaces the EN PLUS standard) defines pellet quality by specifying three classes: A1, A2 and B. Maintain fuels and other flammables at a suitable distance.
Ravelli recommends using wood pellet classified A1 and A2 according to the EN ISO 17225-2:2014 standard, or certified DIN PLUS (more restrictive than the A1 class) or ONORM M 7135.
Pellet may be light or dark coloured, it is normally bagged into bags that show the name of the producer, the main characteristics and classification according to standards.

! IMPORTANT

Pellets must be transported and stored in a dry area. Upon contact with humidity they swell and become unusable: it is therefore necessary to protect them from humidity, both during transport and during storage.

Non-permitted fuels

We recommend not using the following materials as fuel:

- wood
- treated wood (painted, lacquered, glued wood etc.);
- sawdust or chips
- liquid fuel
- coal or other fossil fuels
- plastic and derivatives
- treated paper and cardboard
- waste
- fuels that release toxic or polluting substances

Using these fuels, on top of being forbidden due to the emission of polluting and harmful substances, causes the stove to deteriorate more rapidly and debris to accumulate in the stove and in the smoke evacuation system, thereby reducing performance and safety.

The gases produced by these fuels are dangerous for the environment and for your health!

Using fuel that is not compliant with the above will void the warranty.

! IMPORTANT

The stove installation site must be chosen so that the generated heat can spread evenly throughout the rooms that you wish to heat.

The stove needs to be connected to a single chimney that guarantees the draught declared by the Manufacturer and observes the installation regulations that apply to the installation site.

The room where the stove is installed must have an air intake.

The Manufacturer will not be held liable for installation that is not compliant with the laws in force, incorrect air circulation in the rooms and inappropriate use of the appliance.
In particular, it is necessary:

- that the appliance be connected to a smoke evacuation system duly sized to guarantee the draught declared by the Manufacturer, that is tight and observes the distances from flammable materials;
- that there is a suitable combustion air intake in compliance with the type of installed product;
- that other installed combustion appliances or devices do not create a vacuum in the room where the stove is installed;
- that the safety distances from flammable materials are observed.

Verification of system compatibility has a priority over any other assembly or installation operation.

! IMPORTANT

Local administrative regulations and particular requirements of the authorities pertaining to the installation of combustion appliances, the air intake and the smoke evacuation system, may vary based on region or nation. Check with your local authorities if there are stricter laws than set forth herein.

TECHNICAL CHARACTERISTICS

RBC 8010 - RBC 8012 technical diagram

	RBC 8010	RBC 8012	*Unit of measurement*
Height	704	704	mm
Width	885	885	mm
Depth	986	986	mm
Empty weight	130	130	kg

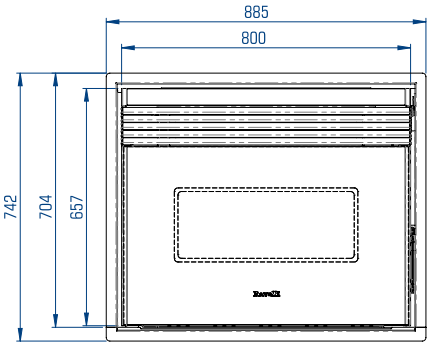

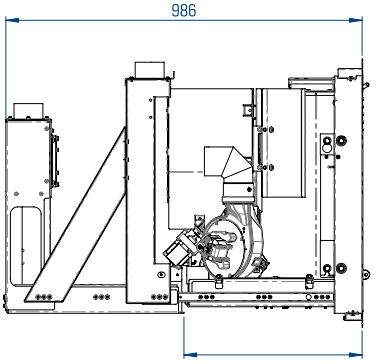

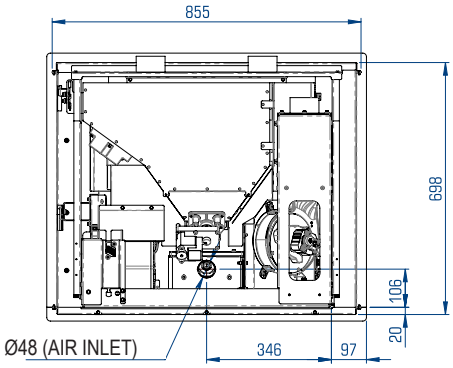

***CHIMNEY EXTRACT ROUND 450 mm**

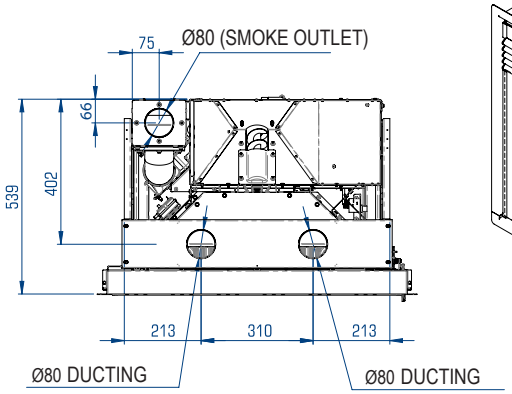

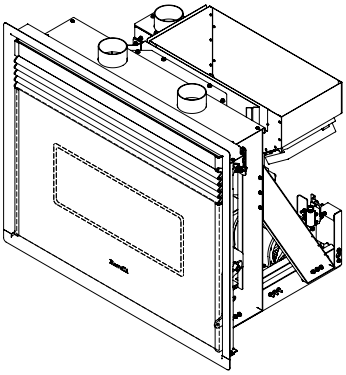

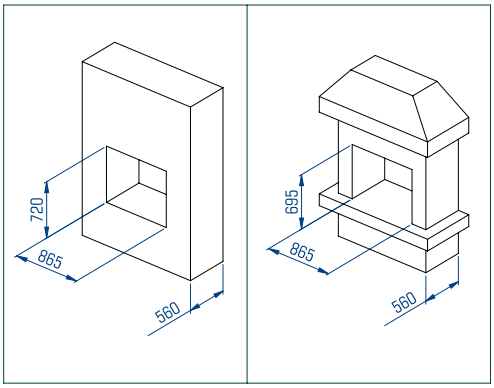

Minimum distance from flammable materials

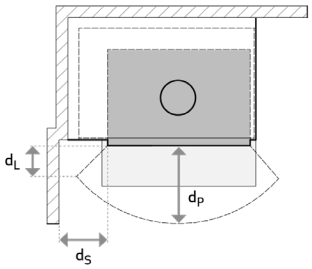

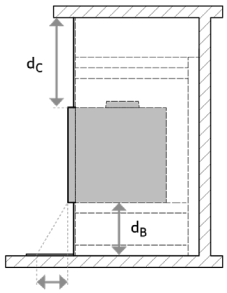

d_R	Rear	221 mm
d_S	Front / Sides	190 mm
d_C	Ceiling	750 mm
d_P	Front	2000 mm
d_F	Front to floor	1500 mm
d_L	Lateral Radial	1500 mm
d_B	Floor	300 mm
d_{non}	Minimum distances from not flammable walls	50 mm

SHIPPING AND INSTALLATION

Safety warnings for transportation and installation

! IMPORTANT **The stove must be installed by a qualified technician, who must issue a declaration of conformity of the system to the purchaser, taking full responsibility for stove installation and correct operation.**

! IMPORTANT **The stove installation site must be chosen so that the generated heat can spread evenly throughout the rooms that you wish to heat.**

The stove needs to be connected to a single chimney that guarantees the draught declared by the Manufacturer and observes the installation regulations that apply to the installation site.

The room where the stove is installed must have an air intake.

The air vent must be installed in such a way that it can not be blocked.

The Manufacturer will not be held liable for installation that is not compliant with the laws in force, incorrect air circulation in the rooms and inappropriate use of the appliance.
In particular, it is necessary:

- that the appliance be connected to a smoke evacuation system duly sized to guarantee the draught declared by the Manufacturer, that is tight and observes the distances from flammable materials;
- that there is a suitable combustion air intake in compliance with the type of installed product;
- that other installed combustion appliances or devices do not create a vacuum in the room where the stove is installed;
- that the safety distances from flammable materials are observed.

Verification of system compatibility has a priority over any other assembly or installation operation.

! IMPORTANT **Local administrative regulations and particular requirements of the authorities pertaining to the installation of combustion appliances, the air intake and the smoke evacuation system, may vary based on region or nation. Check with your local authorities if there are stricter laws than set forth herein.**

Packaging

When the stove arrives, check:

- that it is the model you ordered;
- that it has not been damaged during shipping.

Any complaints must be reported to the deliveryman (also on the delivery note) upon receival.

Check the capacity of the floor before handling and positioning the stove.

To handle the stove in its packaging, follow the procedure below:

1. Position the pallet truck forks in the slots under the wooden pallet.
2. Lift slowly.
3. Place the stove near the chosen location for installation.

The stove always needs to be handled vertically. Take extra care to protect the door and its glass against mechanical impact that could jeopardise their integrity

.

To unpack the stove, follow the procedure described below:

1. Cut the straps and remove the wooden reinforcement frame resting on the box
2. Slowly lift the cardboard box
3. Remove any bubble-wrap or similar
4. Remove the stove from the pallet and position the appliance in the chosen location, ensuring that it is compliant with the directions.

! IMPORTANT **The end user is responsible for disposing of the packaging in accordance with the laws in force in the country of installation.**

Set-ups for the smoke evacuation system

Be careful when building the smoke evacuation system and observe the regulations in force in the country where the stove is installed.

! IMPORTANT **The Manufacturer will not be held liable for incorrectly sized and non-regulation smoke evacuation systems.**

Smoke ducts and fittings

The term smoke duct indicates all ducts that connect the combustion equipment to the chimney.
The following requirements need to be applied:

- observe product standard EN 1856-2;
- the horizontal sections must have a minimum slope of 3% upwards;
- the length of the horizontal section must be as minimum as possible, and its projection on the horizontal plane must not exceed 2 metres;
- changes in direction must not have an angle of more than 90° (45° bends are recommended);
- the number of direction changes, including the one necessary for insertion into the chimney, must not exceed 3;
- the cross section must have a constant diameter, the same from where it exits the firebox up to the fitting into the chimney;
- it is forbidden to use flexible metal and fibre cement pipes;
- smoke ducts must not cross rooms where the installation of combustion equipment is prohibited.

In any case, the smoke ducts must be sealed against combustion products and condensation, as well as insulated if they lead outside of the installation room.
Installing manual draught adjustment devices is not allowed.

! IMPORTANT **Creating an initial straight vertical smoke duct section of at least 1 m to ensure proper smoke ejection is mandatory.**

Chimney

The chimney is a particularly important element for correct stove operation.

The chimney must be sized so as to guarantee the draught declared by the Manufacturer.

Do not connect the stove to a collective chimney.

.
The chimney must be built applying the following regulations:

- it must observe product standard EN 1856-1;
- it must be made of materials that are suitable to guarantee resistance against normal mechanical, chemical and thermal stress and be correctly thermally insulated to limit the formation of condensation;
- it must be mainly vertical and not feature any bottlenecks along its entire length;
- it must be correctly spaced with an air gap and insulated from flammable materials;
- there must be a maximum of 2 changes in direction and angles must not exceed 45°;
- the chimney inside the home, however, must be insulated and can be inserted into a skylight shaft, as long as it respects standards regarding placing inside a tube;
- the smoke conduit must be connected to the chimney using a "T" fitting with an inspection collection chamber for combustion residue and especially for collecting condensation.

! IMPORTANT **It is necessary to check the safety distances that need to be observed when there are flammable materials and the type of insulating material that needs to be used is on the chimney data plate.**

Use watertight pipes with silicone seals.

It is forbidden to use the discharge mounted directly on the wall or directed towards indoor spaces and any other type of discharge that is not set forth by the regulation in force in the country of installation (Note: in Italy only roof-discharge is allowed).

Chimney pot

The chimney pot, i.e. the top end of the chimney, must fulfil the following characteristics:

- the cross-section of the smoke outlet must be at least twice the internal cross-section of the chimney;
- it must stop water or snow from getting in;
- make sure the smoke is taken away even when there is wind (wind resistant chimney pot);
- the outlet height must be outside of the reflux zone (refer to national and local regulations to calculate the reflux zone);
- it must always be built at a distance from antennas or dishes, it must never be used as support.

Installation

For appliance installation and use it is necessary to observe all of the local, national and European laws and regulations.

Stove installation and the preparation of the building work must observe the regulation in force in the country of installation (ITALY = UNI 10683).

! IMPORTANT

The installation activities must be carried out by a technician that is qualified and/or authorised by the Manufacturer. The staff in charge of installation must issue a declaration of conformity of the system to the buyer, whereby they take full responsibility for the final installation and good operation of the installed product.
Ravelli shall not be held liable if these precautions are not followed.

Requirements for the installation premises

The stove installation room must be sufficiently ventilated. To fulfil this requisite it is necessary to equip the room with an air intake connected to the outdoors.

! IMPORTANT

The installation room must have an air intake with a free cross-section of at least 100 cm^2.

! IMPORTANT

For installation in the presence of other combustion appliances or VMC system it is necessary to check the appliance for correct operation.

The stove must be placed inside living quarters. It must never be installed outdoors and in explosive rooms. The volume of the room where it is installed must be suitable for the power of the appliance and, in any case, greater than 15 m^3.

ATTENTION!
When extraction fans (example: extraction hoods) are used in the same room or space as the stove, this can cause problems to stove operation.

The stove must be installed on a floor with suitable load capacity. If the existing position does not fulfil this requirement, it is necessary to take due measures (for example, using a load distribution plate).

ATTENTION!
provide due insulation if the surface is made of flammable material.

If the floor that the stove is standing on is flammable, we recommend duly insulating it. Objects and parts that are heat-sensitive or flammable cannot be stored near the stove; in any case keep these objects at a minimum frontal distance of 100 cm from the most external point of the appliance's footprint.
Stove installation must guarantee easy access to clean the appliance, the exhaust ducts and the chimney.

To avoid overheating of the unit, air recirculation with one or more openings must be created in the upper and lower part of the cladding inside the fireplace structure covering the entire insert.
The following dimensions must be respected:
- bottom inlet for cold air drawn from the room, total minimum area 500 cm²
- top outlet for natural convection of hot air, total minimum area 450 cm².

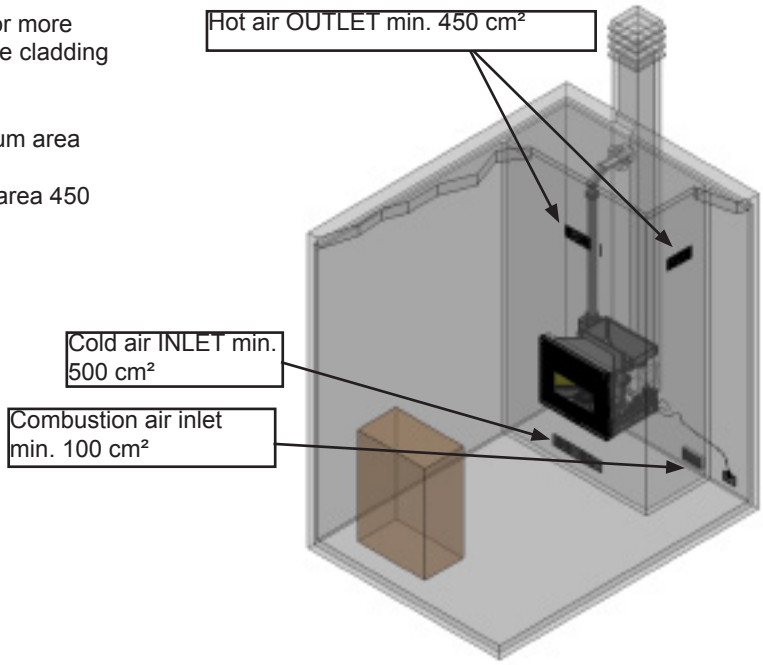

The unit can be installed in an existing fireplace or in a special compartment built to measure and covered with plasterboard; in any case the optional insert support can be requested.
If the compartment is accessible from the outside (a), position the insert with the base resting on the reference surface of the compartment, pull out the monoblock, making sure it does not tip over, and secure the base with 8 anchors to the existing support surface; if a support surface is not available (b), the height-adjustable insert support KIT, to be fixed to the floor, is available on request.

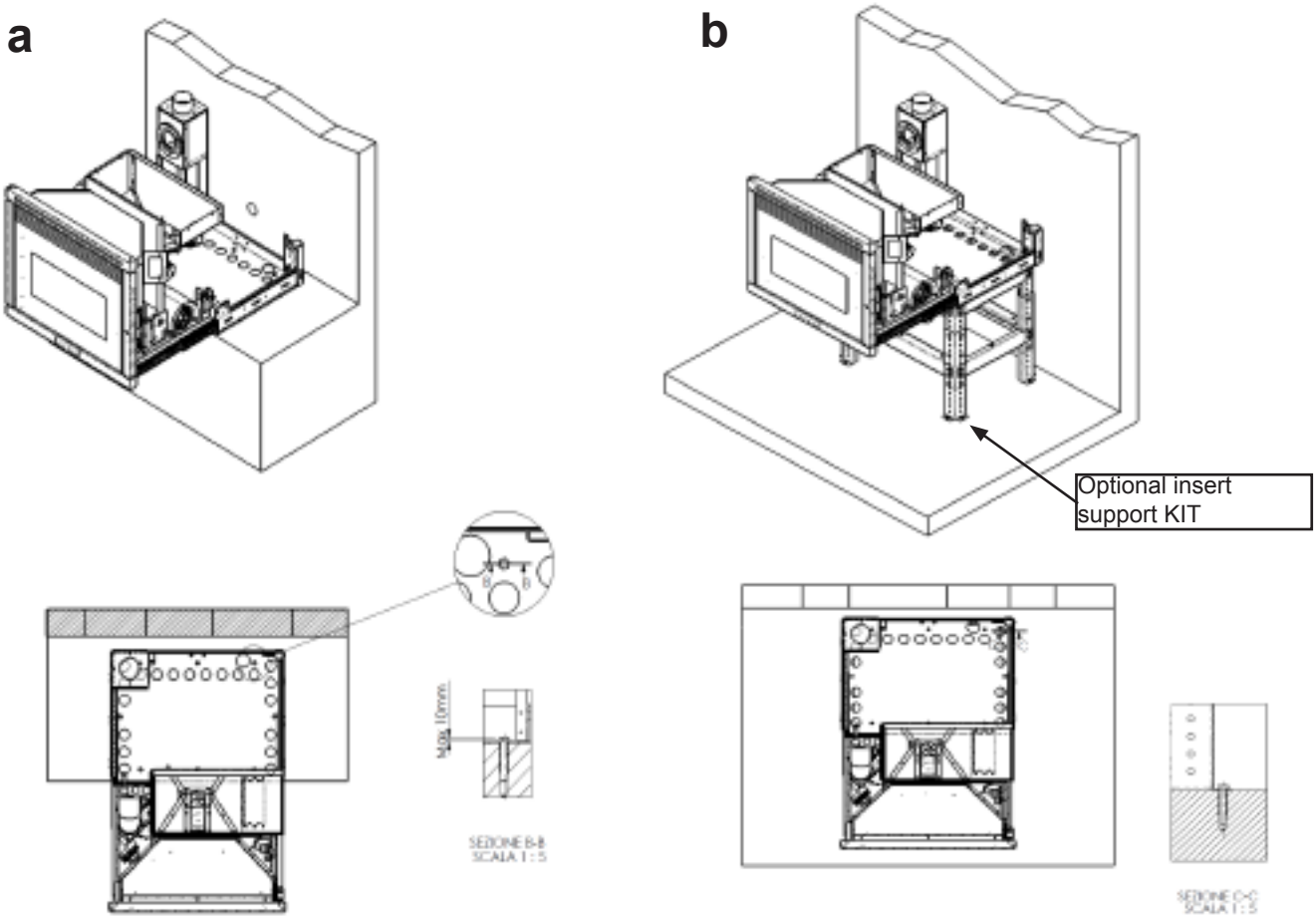

If the compartment is not accessible, proceed as follows:
1 - remove the pullout part of the insert from the guides and the fixed base by undoing the 9 guide-fixing screws each side, after pulling it out completely;
2 - fix the base in the reference compartment with 8 anchors, making sure it is flat-horizontal and perpendicular to the outer wall;
3 - make connections to the flue A
4 - make the electrical connection and/or ensure that the electric cable is run safely to the external outlet;
5 - after pulling out the telescopic guides from the base, refit the monoblock on them, carrying out the procedure of step 1 in reverse order;
6 - check the sliding of the pullout part, locking of the latch and operation of the safety microswitch for the insert's power supply;

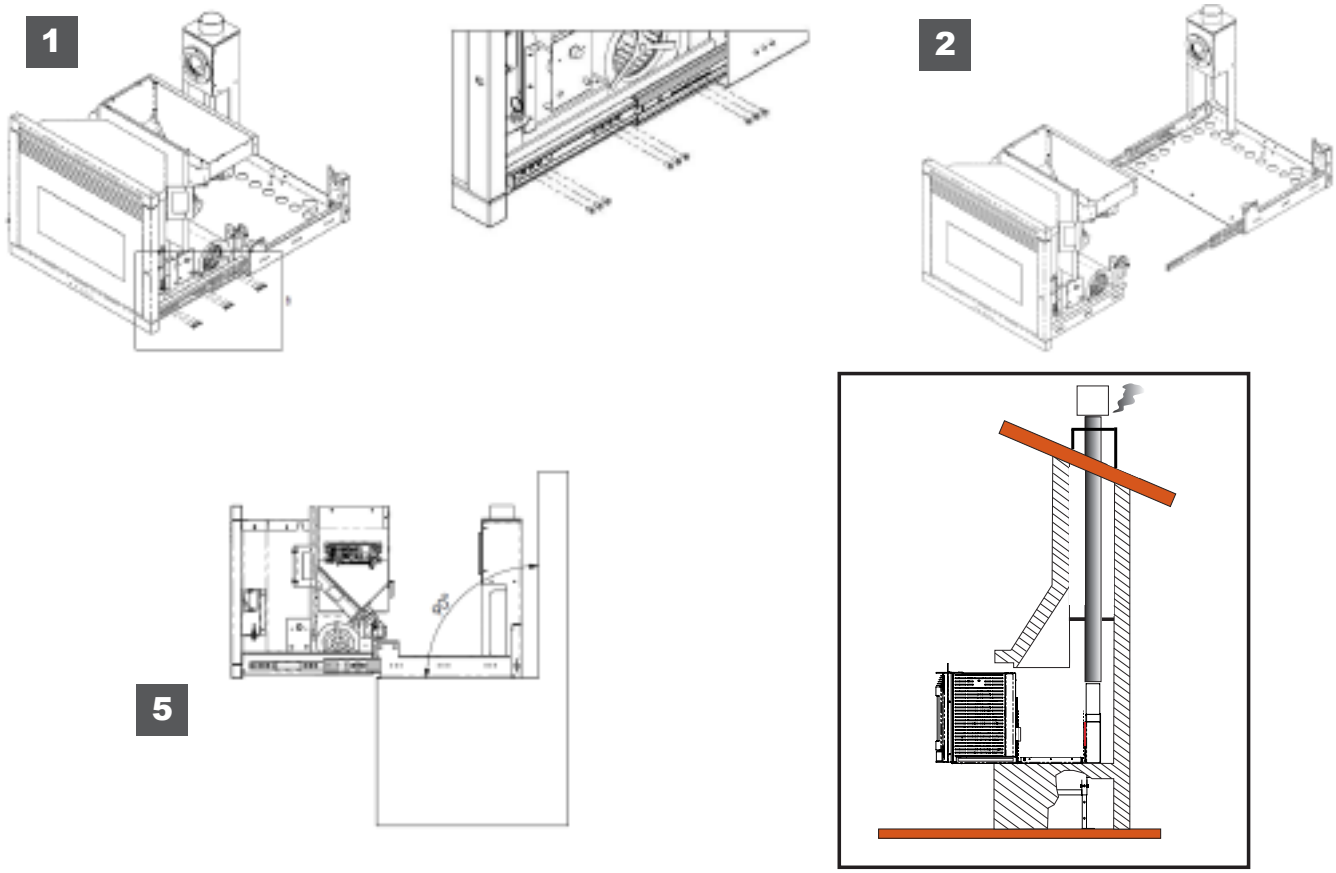

The insert has a remote control with display and incorporated ambient probe for measuring the temperature in the context of the room.
For measuring away from the unit, the installation of a room chronothermostat/thermostat is recommended.

Installation and assembly must be done by qualified and/or authorized personnel.

The insert cannot be installed in bedrooms, bathrooms and in general in rooms where another heating unit is already installed without an independent air inflow.

It is advisable to provide suitable fire-prevention devices for any eventuality.

Do not install the insert in places with an explosive atmosphere.

Hot air ducting

The RBC model has two rear connections of 80 mm external diam. for ducting the hot air flows generated by two centrifugal fans inside the stove in heat exchange with the side walls of the combustion chamber.
To create the ducting system:
- use pipes with internal diam. of 80 mm able to resist temperatures of at least 150°C;
- use pipes that are smooth inside, insulated or isolated;
- reduce, as far as possible, the ducting path and the single pipe section must not be longer than 6 m;
- avoid constrictions or section reductions, tight bends and downsloping sections.

Examples of installation of a pellet insert

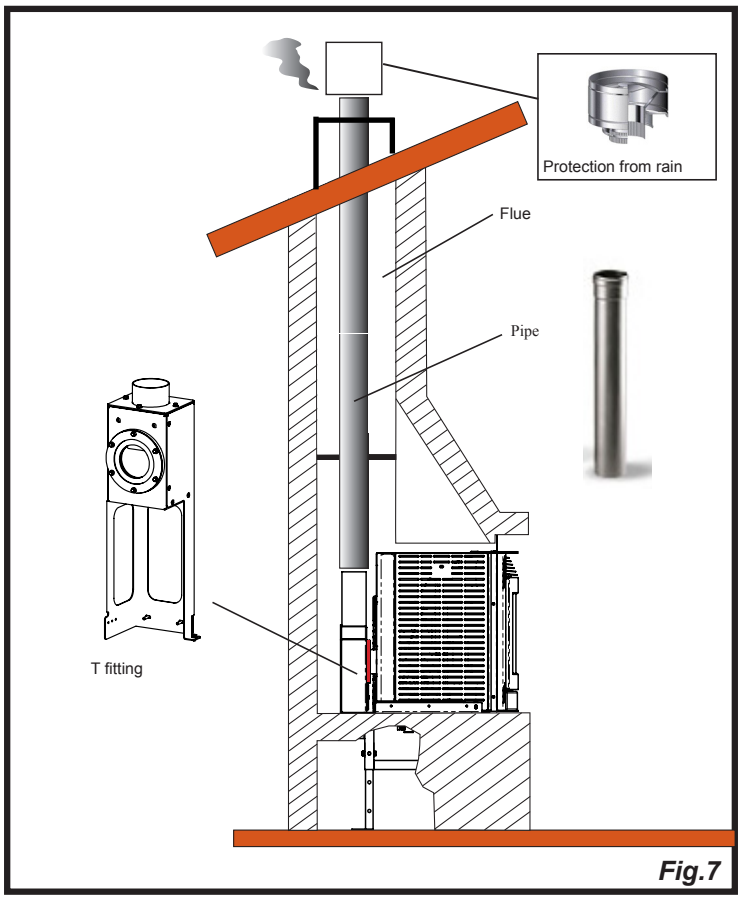

Fig.7

In this type of installation we can notice that the fitting was used to enable connecting the insert to the chimney (so-called “bayonet” mount).

For safety reasons and to ensure proper operation, we recommend you fit pipes into the chimney. (Fig.7)

It is recommended to perfectly match the insert with the fitting, to prevent leaks of smoke during the work phase.

View of T fit

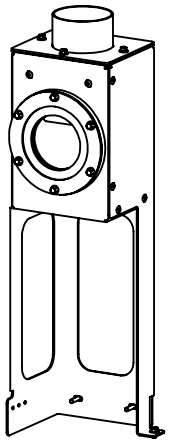

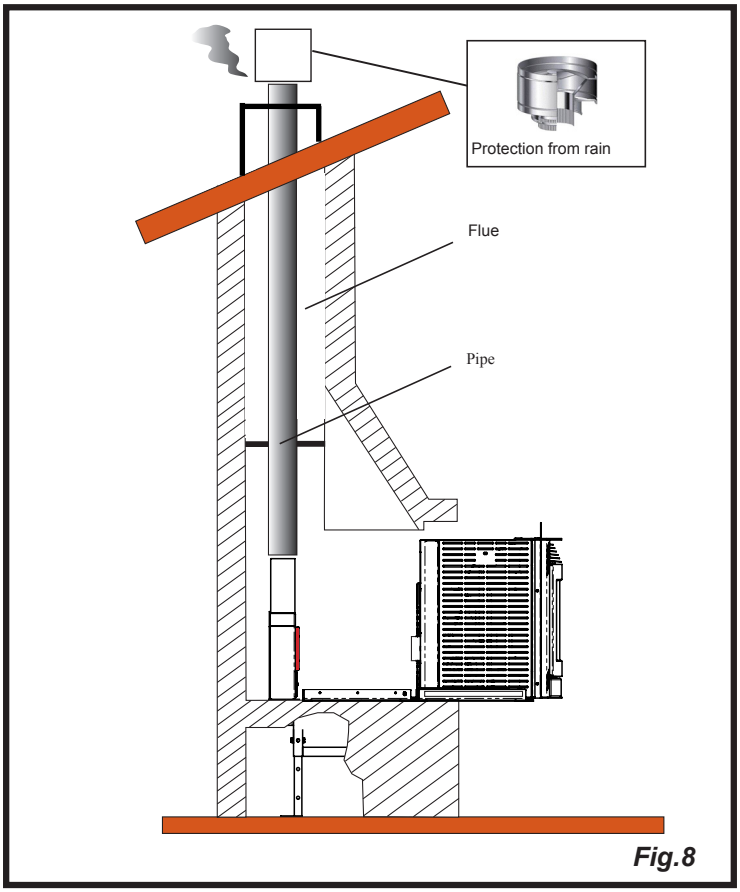

Fig.8

Here you can see the possibility to slide the insert; this operation can only be performed with the stove turned off for loading pellets or during regular checks. (Fig.8)

IT IS STRICTLY FORBIDDEN TO REMOVE THE STOVE DURING THE WORK PHASES; THE FUME MAY DISPERSE INTO THE

CONNECTIONS

! IMPORTANT **The connections must be set up by a technician that is qualified and/or authorised by the Manufacturer.**

Electrical connection

The insert is equipped with a three-pole cable (Fig.2), for a correct installation it is necessary to provide the dedicated electrical connection under magneto-thermic (Fig.1) of adequate size according to the absorption of the generator in order to guarantee the maximum safety of the installation.

Fig.1

Fig.2

Testing and commissioning

Stove start-up must be preceded by testing, which includes an operational check of the following elements:

- connection to the smoke evacuation system;
- checking that all materials used to build the smoke duct, chimney and chimney pot are regulation and suitable for use.

The testing is positive only when all operational phases have been completed without any anomaly being detected.

Electric scheme

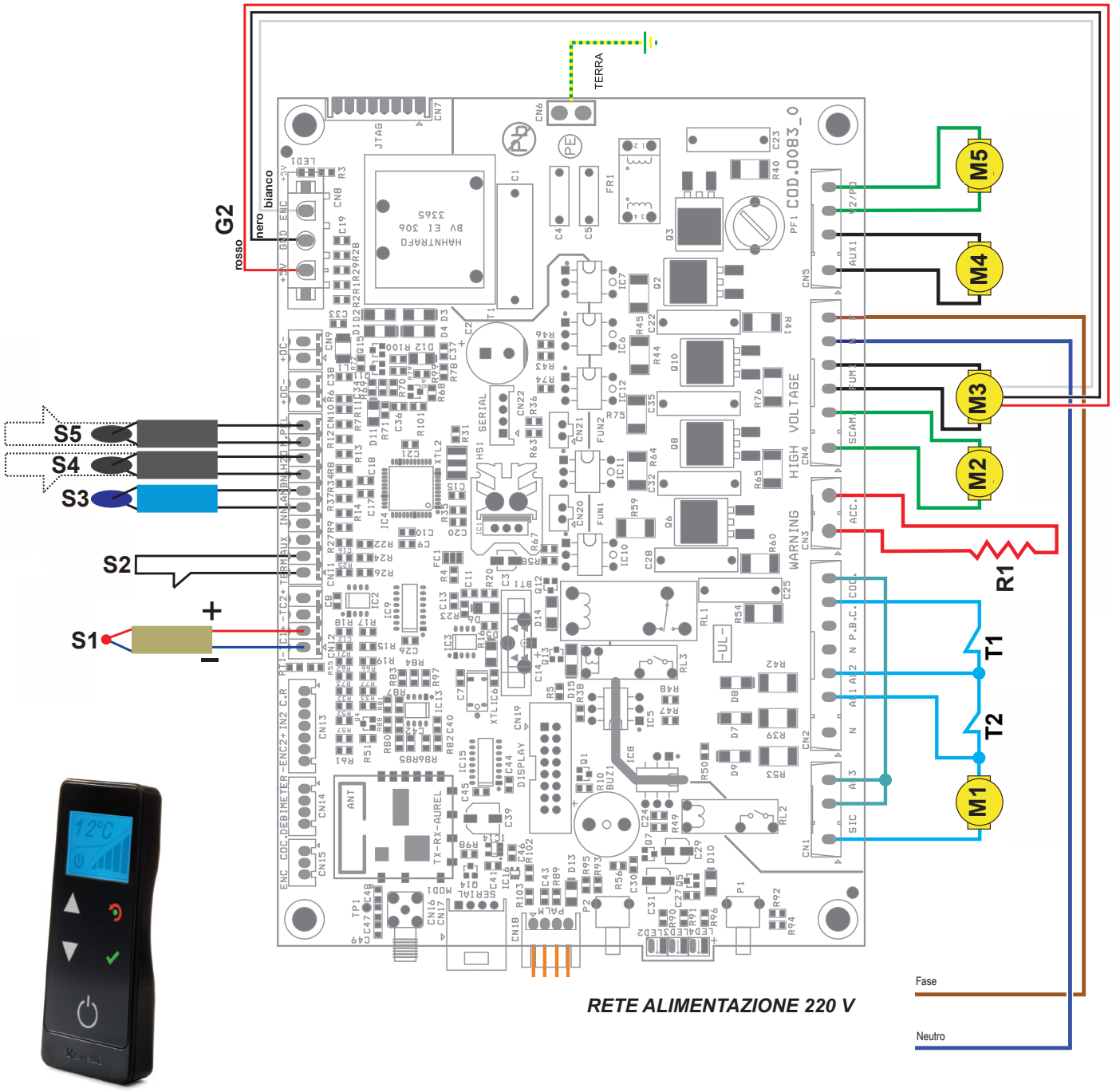

LEGEND:

Safety devices
T1 - Vacuum switch
T2 - Pellet safety

Motors
M1 - Auger gear motor
M2 - Room fan
M3 - Fume exhaust system

Resistance
R1 - 250watt heater

Probes
S1 - Fume probe (J)
S2 - External thermostat
S3 - Room probe
S4 - Rear or RRight Probe/EXT. T.
S5 - RLeft Probe/EXT T.

General
G2 - Extractor revolution reading encoder
G3 - RADIO Touch handheld remote control

Controls and use
Description of the handheld set:
The handheld set is shown in the picture below:

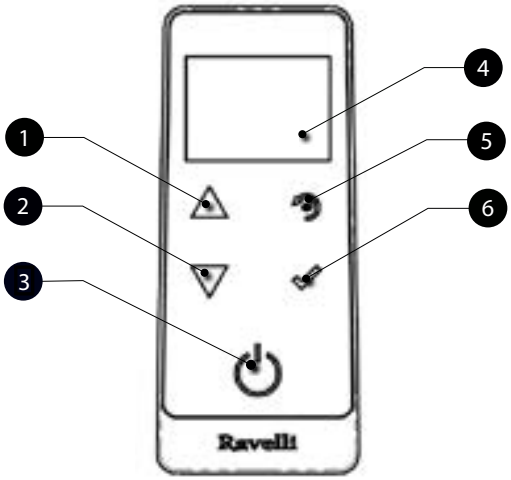

1	Increase button "UP" (selection key)
2	Decrease key "DOWN" (selection key)
3	ON/OFF or reset from "Sleep" mode key.
4	Display
5	Key for accessing the MENU and back
6	Confirmation key

In "Sleep" mode, the handheld set screen is obscured, keeping however active the radio communication with the stove to reduce battery consumption.

The information below will allow you to become familiar with the product and achieve the best performance.

How to insert the batteries in the handheld set:
Remove the protective cover of the battery on the back of the remote control as shown in Figure A, and insert the 3 batteries (mini pen style battery AAA 1.5V) in the housing of the handheld set and observe the poles. Install the battery protective cover as shown in figure B

Figure A

Figure B

The handheld set, after a short screen showing the Ravelli logo, will list the languages available in the menu.

ITALIANO
DEUTSCH
ENGLISH
FRANCAIS
DANSK
NEDERLANDS
ESPANIOL

Select the desired language using the scroll keys and confirm your selection with the confirmation button.

Handheld touch radio initialization

In order to operate correctly, the handheld set should be interfaced with the electronic board installed inside the stove. For this reason, on display appears the following message:

If the handheld set is used for the first time, select YES using the selection keys and confirm with the dedicated key. On the display of the handheld set appears the following:

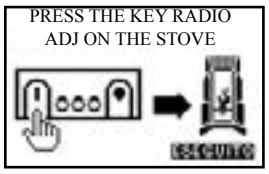

Hold down for a few seconds the button of radio communication (RADIO ADJ) of the PCB, located on the back of the stove, to initialize the device.

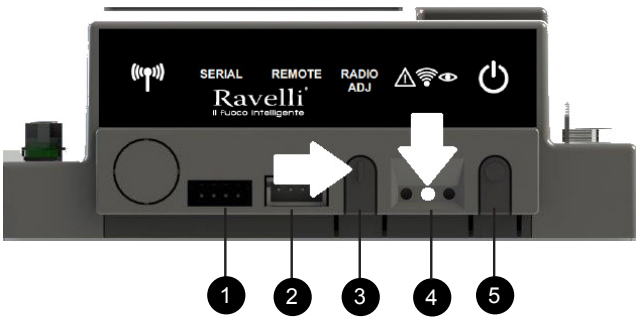

1. Serial port
2. Handheld cable connection socket
3. ADJ radio: button to connect your handheld to the board
4. Signalling LED
   Red: active alarm
   Yellow: Waiting communication with the handheld set
   Green: Cooker switched on
5. Cooker ON/OFF key

The flashing yellow LED indicates that the circuit board is waiting to receive the signal from the handheld set.
By pressing the enter key on the handheld set, the components start communicating with each other. A check sign on the display, accompanied by a sound signal, shows that the initialization of the handheld set has been completed sucessfully

When you replace the batteries, you do not have to run the initialization procedure of the handheld set. In this case, when on display appears the message "FIRST INSTALLATION ?", select **NO** *and press the confirmation key.*

Description of the display

The display of the handheld set is described below (in stand-by mode):

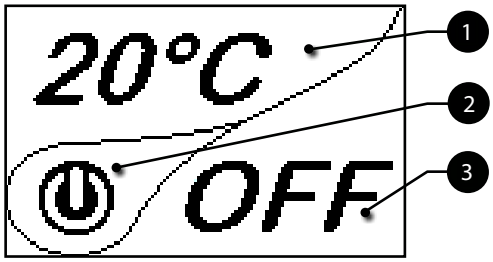

After 5 minutes of inactivity, the display of the handheld set turns dark, switching to "SLEEP" mode, while maintaining the radio connection with the stove. By pressing the key ON/OFF, the display becomes active again.

The first pressure of any key with the display active, lights up its backlight, but it is not, however considered a command.

The display is subdivided into three parts:

1 It shows the current room temperature measured by the handheld set. Moreover, if you press the DOWN scroll key you will display the temperature settings that can be changed using the two UP/DOWN keys. Any change made is confirmed automatically within 3 seconds from the change or by pressing the confirmation key. A sound signal indicates that the change has been confirmed.

2 Icon indicating the status of the stove (see synthetic phase diagrams).

3 In the inactive phases (combined with the second part of the display) indicates the state of the stove.
In the active phases, it indicates the operating power of the stove.
In addition, by pressing the DOWN scroll button, you can display the power settings, that can be edited using the two scroll keys UP/DOWN: The confirmation of any change takes place automatically within 3 seconds from the change or by pressing the confirmation key. A sound signal indicates that the change has been confirmed.

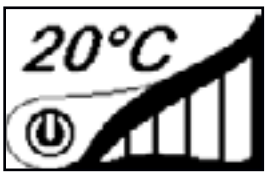

Time and date setting
Below are given the steps for accessing the relative menu.

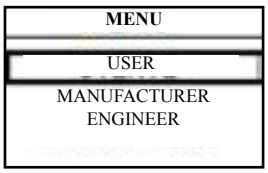

Press the key "access menu" to access the MENU page

Press the key "confirm" to access the USER page

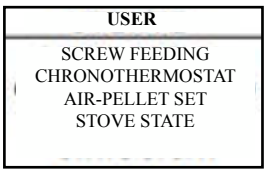

Press the key "selection" for "selection" to switch to the second page of USER MENU and select SETTINGS.

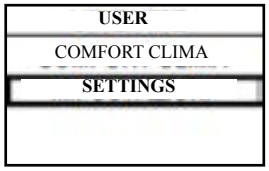

Press the key "confirm" to access the SETTINGS page

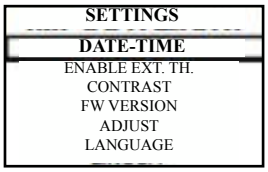

Press the key "confirm" to access the page DATE-TIME

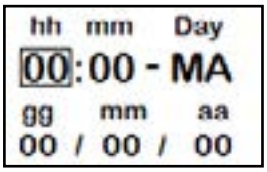

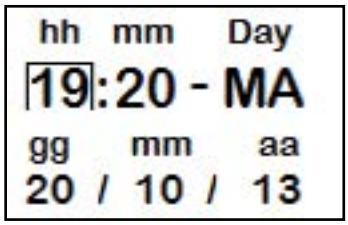

Press the increase key to change every single value

Press the increase key to change every single value

Press "confirm" to confirm the settings and switch to the next value.

By pressing the key "back" for several times you will display the stand-by page.

PROCEDURES FOR USE

If the chimney catches fire you must call the fire brigade immediately.

Checks prior to start-up

You have read and perfectly understood the contents of this instructions manual.

Before lighting the stove, you must ensure that:
- the combustion chamber is clean;
- every element that could burn has been removed (instructions, various stickers).

! IMPORTANT

During the first hours of use the paints used for the stove finish may release an unpleasant odour. You might also smell the typical odour of metal parts subject to high temperatures. Make sure sufficient air circulation is guaranteed in the room. These unavoidable inconveniences will disappear after the first hours of operation. To reduce your discomfort to a minimum, keep the stove on for a few hours on low power and in the beginning, do not overload it, avoiding intense heating-cooling cycles.

! IMPORTANT

At the initial start-up, the paint finishes drying and hardens. Accordingly, to avoid ruining it, we advise you not to touch the stove's painted surfaces at this time.

Recharge the fuel

Use only wood pellets, the characteristics shown in this manual.

During pellet loading prevent the pellet bag from coming into contact with hot surfaces.

Switching the appliance on and off

From the "stand-by" screen, it is possible to switch the stove on and off by keeping the ON / OFF button pressed on the device for a few seconds. An acoustic signal will warn you that the appliance has switched on or off. In case it is not possible using your handheld you can switch the appliance on / off using the appropriate button on the electronic board.

Do not switch off the heater by unplugging the plug from the wall socket.

Failed ignition

To turn the stove back on, reset the alarm by keeping the power button on the handheld (or on the electronic card) pressed until the acoustic signal is heard and then switch on again.
It is not necessary to remove any unburnt pellets inside the brazier. In fact, as soon as the user reboots the stove, the system tries to ignite any fuel left in the brazier before starting the loading phase.

Hot air outlet flow adjustment

The insert can convey the hot air flows entirely or partially to the front upper grille in the connection of the ducting system by means of a valve controlled manually with a lever

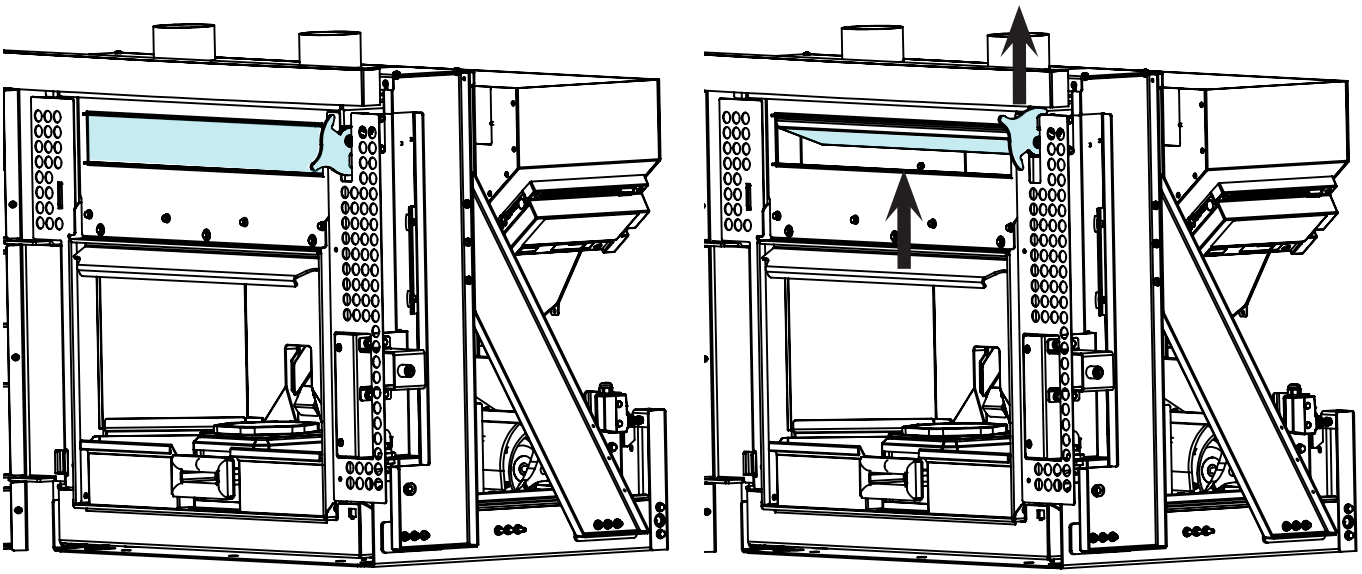

Loading the auger

Carry out this operation to facilitate stove's first start operations; You should also check that you have introduced pellets into the hopper and wait until the stove is in "SHUTDOWN" or "FINAL CLEANING" mode. The number expressed in seconds indicates the rotation time of the infeed screw during the first loading cycle. Once this time has elapsed, the infeed screw stops immediately and then pellets are emptied from the grate before turning on the equipment.

Below are given the steps for accessing the relative menu.

Press the key "access menu" to access the MENU page

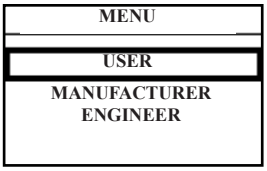

Press the key "confirm" to access the USER page

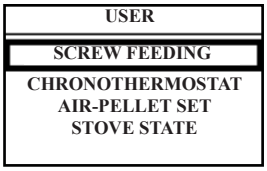

Press CONFIRM to enable the rotation of the auger

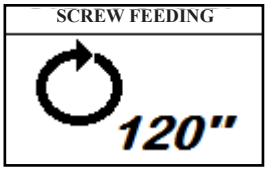

At the end of the auger loading, the display shows 0 "and automatically switches to the USER menu page.

Press the key for several times until the Stand-by page is displayed.

ALWAYS EMPTY THE BRAZIER BEFORE TURNING THE STOVE ON AND ALWAYS CHECK THAT ALL NONE OF ITS HOLES IS CLOGGED NEVER EMPTY THE RBAZIER INSIDE THE HOPPER. FIRE HAZARD.

Setting operating temperature and power:
Set the two values following the indications given in the chapter "Description of thr display"

Turning the device on
Keep the key ON/OFF pressed for a few seconds to turn on the stove.

The appearance of the message "ADJUST THE RDS SYSTEM" indicates that the initial parameter testing procedure and calibration has been unsuccessfully. This indication does not cause stove blockage (see the SIGNALLING POP UP section).

On the display of the handheld set appears the following:

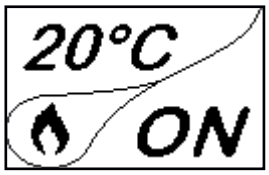

Press and hold the ON/OFF button to turn off the stove door, and reset any alarms triggered.

In case the infeed screw operations described avobe have not been executed, the stove may fail to turn on. In this case, carry out the operations described above and empty the brazier and reset the alarm.

If the stove still fails to turn on, check that the grate is properly installed and perfectly adherent to the base, and also check that there are no deposits that prevent the smooth passage of air to enable ignition. If the problem persists, contact the support service.

Sequence of ignition phases

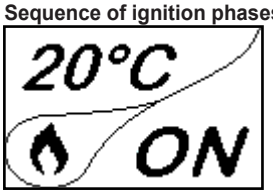

SWITCH-ON- initial pellet loading phase;
WAIT FLAME - flame development wait phase;
FLAME PRESENT - flame stabilization phase and reduction of combustible inside the brazier;

WORK - operation phase described in the dedicated chapter;

What happens if the batteries are empty?

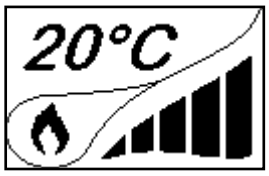

If the battery is discharged, within the "drop" is shown a symbol that indicates that the battery is empty, while maintaining active the features of your device.

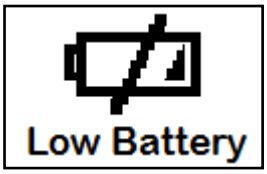

As soon as the level of the battery prevents the radio communication the handheld set displays on full screen the picture of empty battery and all device functions are locked until the batteries are replaced

OPERATING PHASES OF THE APPLIANCE

Modulation

During the work phase, the appliance should reach the room temperature set; when this condition is met, the stove switches to MODULATION mode in which fuel consumption and ventilation are minimum.

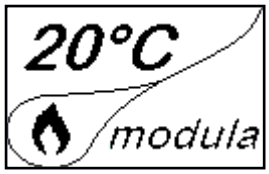

If you wish to detect the ambient temperature by means of an external thermostat (optional), this must be connected to the appropriate connector on the rear side of the stove; and you will have to activate the reading in "SETTINGS - EN - ABLE THERMOSTAT." On display appears the writing TON / TOFF based on thermostat request.

CONNECT AN EXTERNAL THERMOSTAT WITH A SIMPLE DRY CONTACT, THEREFORE, NOT POWERED. MORE-OVER, WE RECOMMEND YOU USE A THERMOSTAT WITH A MINIMUM OFFSET OF 3°C IF YOU INTEND TO USE THE COMFORT CLIMA FUNCTION.

Comfort climate

The activation of this function enables the stove to reduce pellet consumption by activating the modulation phases, after the desired temperature has been reached. Subsequently, the stove checks that the temperature is maintained steady for a preset time. If this condition is met, it automatically switches off, and on display appears the writing ECO.
The stove turns on again when the temperature drops below the set threshold.

Below are given the steps for accessing the relative menu.

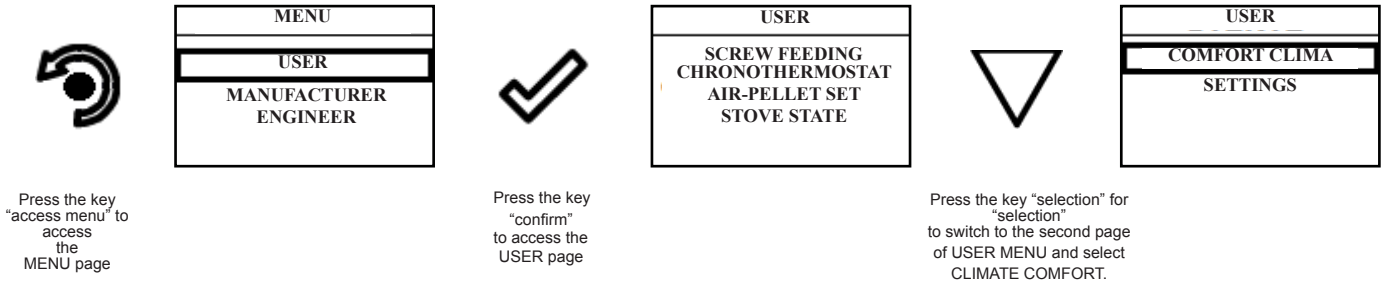

Once you have accessed the Climate Comfort menu, it is possible to operate on the 3 types of settings dedicated to the function:

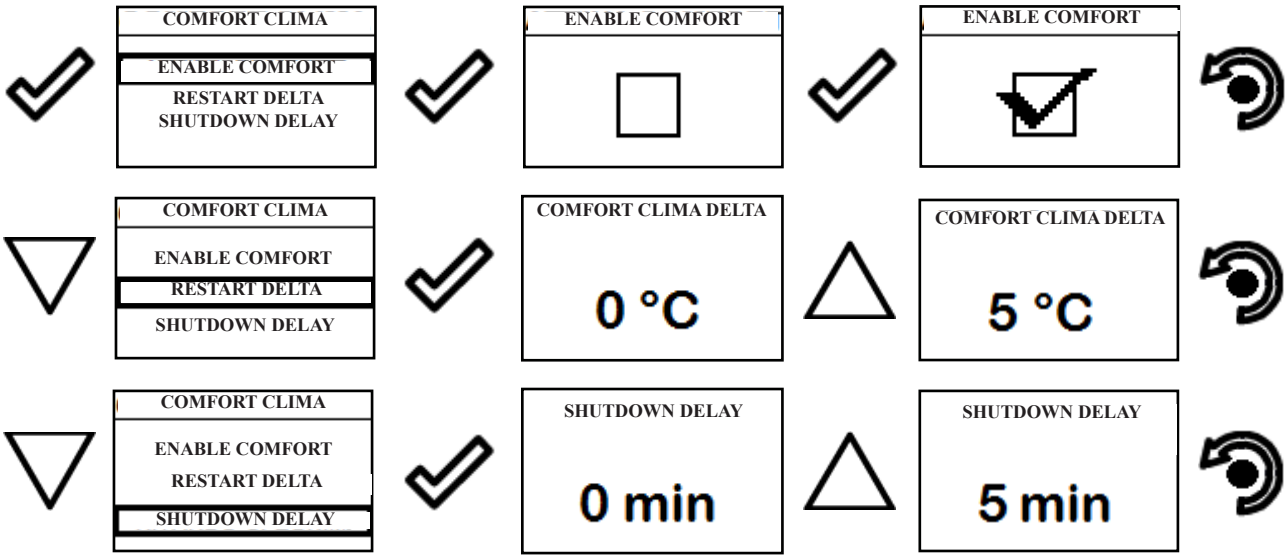

Press the key for several times until the Stand-by page is displayed.

The first setting allows the activation of the CLIMATE COMFORT function. This function is intended to ensure that the room tem -perature set is maintained steady upon setting the maximum period of “X” minutes (SWITCH-OFF DELA Y: 5 MIN) before switch-ing to ECO STOP phase. The STOVE maintains this state until the temperature drops below the set value (CLIMATE COMFORT DELTA : 5).
For example, with the room temperature at 21 ° C, the stove switches of f when this temperature is reached and restarts when the temperature reaches 15°C (21°C - 5°C - 0,5°C tolerance).
You can also activate the function using an external thermostat, keeping in mind that this does not include the value of the hyster -esis.

We recommend you use an external thermostat with a histeresys value that can be set to maximum 3°C. The operation of the stove could activate the switch ON/OFF phases for several times during the day; this may affect the service life of the ignition coil.

USING THIS METHOD, IT IS NECESSARY TO VERIFY THAT AFTER EACH AUTOMATIC SHUTDOWN THE GRATE IS ALWAYS VERY CLEAN TO GUARANTEE CORRECT AUTOMATIC SWITCH ON. AUTOMATIC SWITCH ON.

Description of menu functions

Press the key to access the MENU page

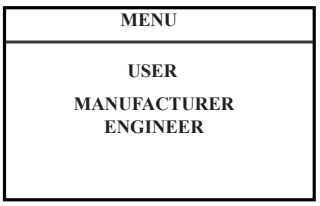

The TECHNICIAN and MANUFACTURER menus are protected by password.

Chronothermostat

With the Chrono-thermostat function you can program the automatic switch ON/OFF of the stove for each day of the week for each day of the week in 4 independent time intervals (SET CHRONO 1-2-3-4)

Below are given the steps for accessing the relative menu starting from Stand-By mode.

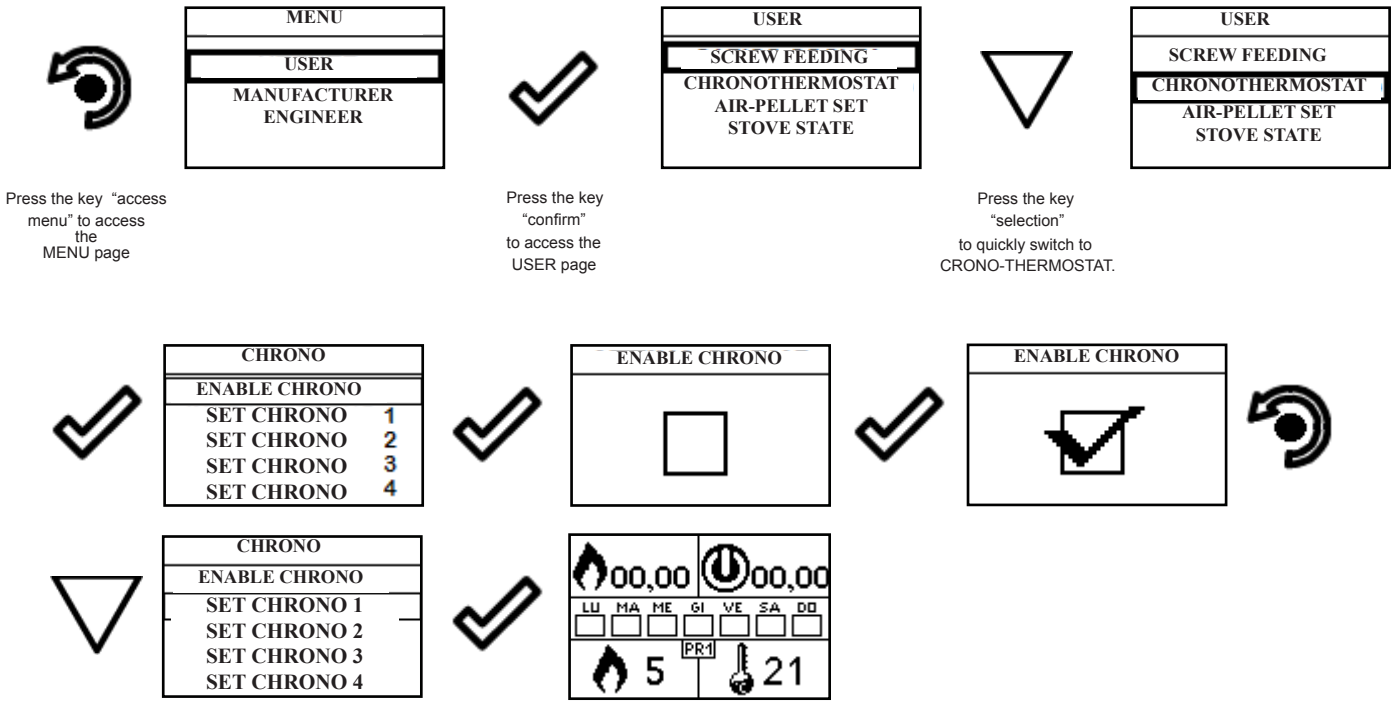

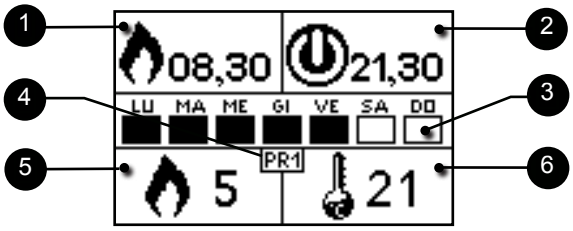

1	Settable switch-on program
2	Settable switch-off program
3	Day of the week with active program
4	Number of "chrono" program (1-2-3-4)
5	Setting the power upon programming
6	Setting ambient temperature

By pressing the Increment key you can change each value and, at step 3, enable the days of the week;

By pressing the Increment key you can change each value and, at step 3, enable the days of the week;

Press “confirm” to confirm the settings and switch to the next value;

Press the “back” button to return to the CHRONO-THERMOSTAT page.

As per the above example, it has been set as CHRONO 1 an ignition from 08.30 to 21.30 from MONDAY to FRIDAY at the operating power 5 with a room temperature set at 21 ° C. Programmes 2-3-4 can be set in the same manner.

To exit the CHRONO-THERMOSTAT function and return to Stand-by page, press the button repeatedly.

AIR / PELLETS setting

Setting of the PELLET-FLOW mix enables you to immediately change the quantity of pellet loaded in the brazier and the air inflow. The stove is tested and inspected with DIN PLUS certified pellets. If using another type of pellets or uncertified pellets, fuel may need adjustment. Usually, the variation involves the FLOW percentage to adjust the input air and, therefore, the combustion; should the regulation of flow be insufficient, it may be necessary to also change the percentage of PELLET load.

Below are given the steps for accessing the relative menu starting from Stand-By mode.

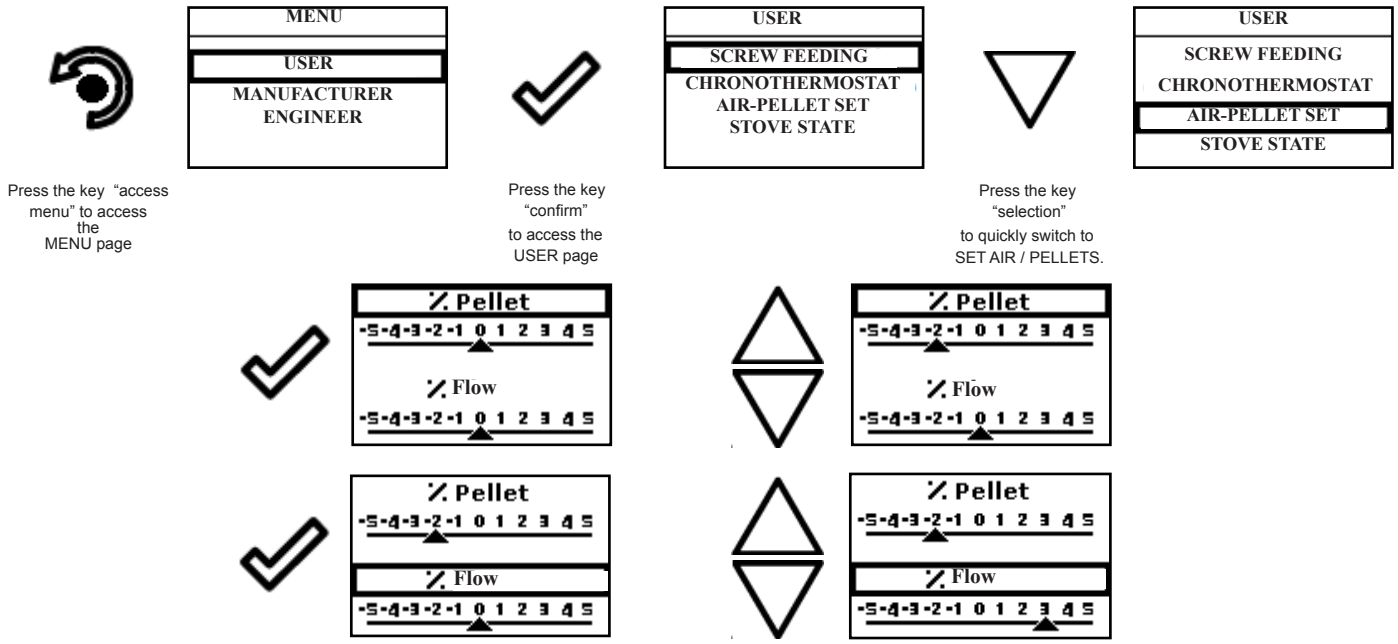

As per the above example, you have set a percentage of -2 for PELLETS and +3 for the FLOW , an indication that a setting like this is a consequence of the fact that the oxygen needed for combustion is insufficient and pellet size is smaller than the average size of 2 cm.

To exit the SET AIR - PELLET function and return to Stand-by page, press the button repeatedly.

NOTE: The number indicated during the change of parameters refers only to a percentage value that acts on the default parameters set on the electronic board (exclusively in the WORK phase). These values should be changed in the event of poor combustion, due in many cases to the purchase of pellets differing from those used during stove testing.

Stove State

Below are given the steps for accessing the relative menu starting from Stand-By mode.

Press the key "access menu" to access the MENU page

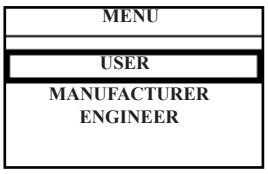

Press the key "confirm" to access the USER page

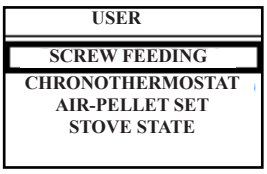

Press the key "selection" to quickly switch to STOVE STATE.

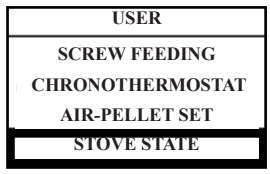

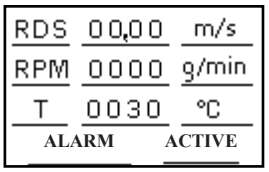

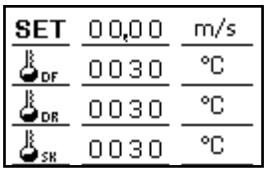

In this mode you can check the proper operation of the most important parameters of the appliance. Below is a list of real data of the stove useful for service during inspection.

- Actual flow
- Fume extractor revolutions;
- Fume temperature;
- Stove state:
- Actual flow set;
- Inlet flow meter temperature;
- Heated flow meter temp.;
- Electronic board temperature;

To exit the STOVE STATE page and return to Stand-by page, press the button repeatedly.

Settings > Enable thermostat

Below are given the steps for accessing the relative menu starting from Stand-By mode.

Press the key "access menu" to access the MENU page

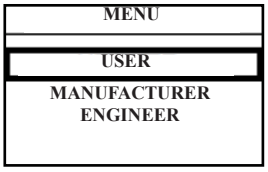

Press the key "confirm" to access the USER page

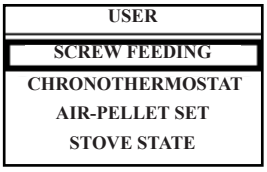

Press the key "selec-tion" to quickly switch to the second page of the menu SETTINGS.

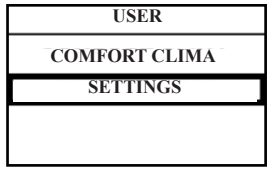

Press the key "confirm" to access the SETTINGS page

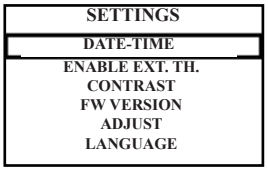

Press the key "selection" to switch to the function

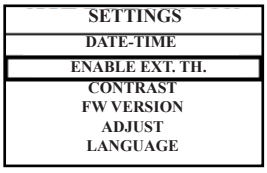

Press the key "confirm" to access the function

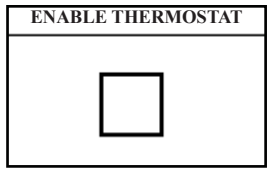

Press the key "confirm" to enable the function.

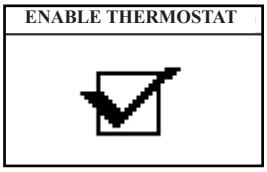

ENABLE THERMOSTAT. By repeadely press-ing the key ou will go back to the "STAND BY"

In Stand-By mode, instead of the measured and settable ambient temperature appears the line T ON if the room where the thermostat is installed has not yet reached the requested value or the writing T OFF if the room temperature set has been reached.

Settings

Below are given the steps for accessing the relative menu starting from Stand-By mode.

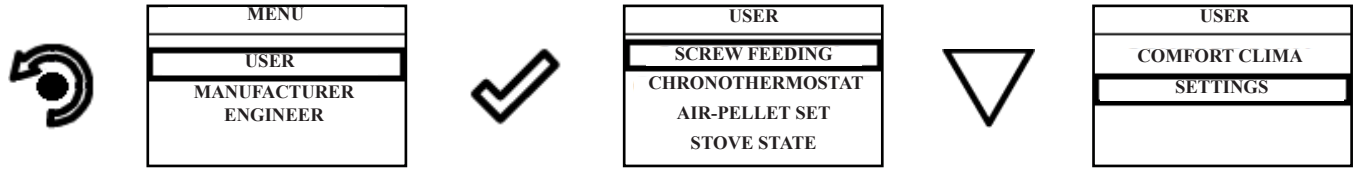

Press the key "access menu" to access the MENU page

Press the key "confirm" to access the USER page

Press the key "selection" to quickly switch to the second page of the menu

After following the procedure above step by step, you can set the following functions:

Settings > Contrast

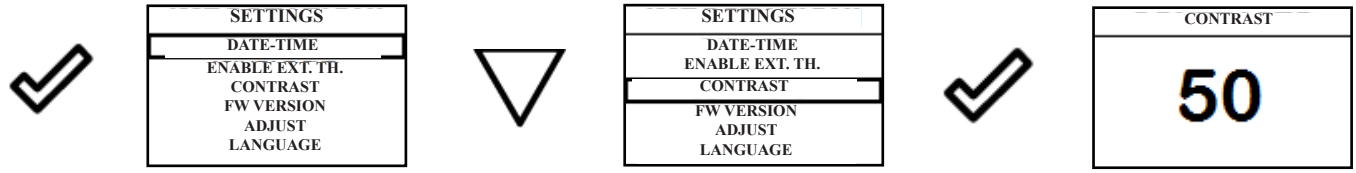

Press the key "confirm" to access the SETTINGS page

Press the key "selection" to switch to the function CON-TRAST.

SETTINGS. Press the key "confirm" to access the function

Use the UP/DOWN keys to change contrast setting and obtain a better visualisation of the information shwon on the handheld set. The value can vary from 0 to 100. 50 with respect to

By pressing the following button you will confirm the data and switch to the page within the SETTINGS menu.

Settings > Firmware version

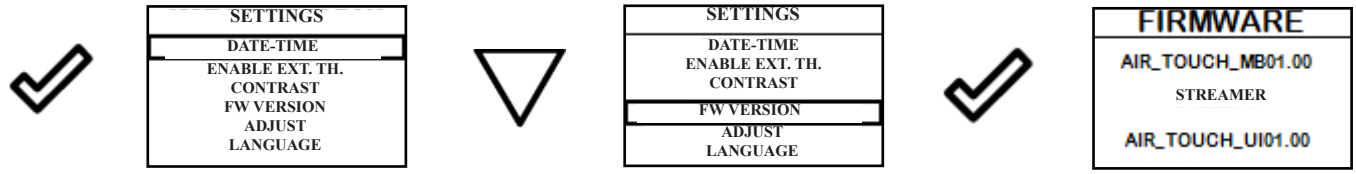

Press the key "confirm" to access the SETTINGS page

Press the key "selection" to switch to the function CON-TRAST.

Press the key "confirm" to access the function

By pressing the following button you will confirm the data and switch to the page within the SETTINGS menu. SETTINGS.

Settings > Adjust

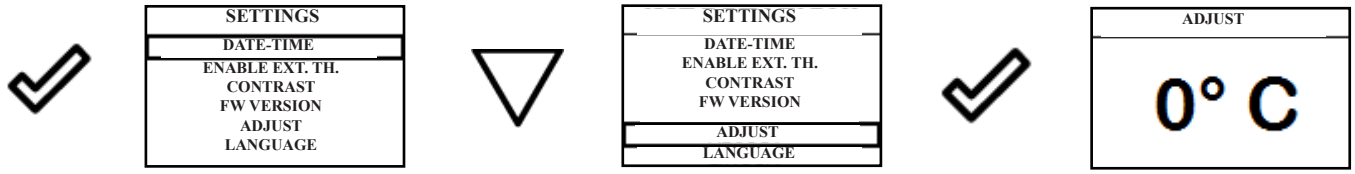

Press the key "confirm" to access the SETTINGS page

Press the key "selection" to switch to the function VERSION FW.

Press the key "confirm" to access the function

Use the UP/DOWN keys to change the value read by the room temperature probe installed inside the handheld set, with respect to a reference value. The value can vary from -10°C to 10°C. The standard value is 0°C.

By pressing the following button you will confirm the data and switch to the page within the SETTINGS menu.

Stove phase synthetical layout

	PHASE	DESCRIPTION
20°C OFF	***FINAL CLEANING***	The stove is in the switch off phase and the cooling phase has not been completed yet.
20°C ON	***SWITCH ON***	The heater pre-heating phase has started and the pellets start to fall into the grate.
20°C ON	***WAITING FOR FLAME***	The pellets ignite and take advantage of the heat in the intake air that passes through the incandescent heater tube.
20°C ON	***FLAME PRESENT***	The flame is visible in the grate.
20°C	***AREAS***	The stove has completed the switch on phase and runs at maximum set capacity.
20°C modula	***WORK MODULA***	The room temperature set has been reached.
20°C	***THE GRATE***	Brazier cleaning phase is active (periodic function).
20°C Eco	***ECO STOP***	With Climate Comfort active, the stove switches to automatic switch-off mode when the room temperature set is reached (see the dedicated section).
20°C ON	***START/RESTART WAIT***	Switch-on is requested but with the stove in cooling phase; once this condition is met, it restarts automatically.
20°C ON	***SWITCH ON RESTART***	The HOT restart phase is activated. Functioning is similar to the SWITCH ON phase
20°C	***HOT SMOKE***	The maximum fume temperature threshold has been reached. To facilitate cooling, the stove brings the capacity to a minimum with ventilation at power level 5, leading to a decrease in fume temperature.
20°C OFF	***OFF***	The stove is off
20°C ON	***WAIT FOR PELLETS OUT OF***	When the switch-on request from ECO-STOP mode coincides with an automatic switch-off condition (from the TIMER), the stove turns on ensuring total cleaning of the brazier before switching to FINAL CLEANING.
20°C Excessive Load	***INFEED SCREW OVERFLOW***	CONDITION: when the pellet setting (set pellets +5) is near the continuous load condition. SOLUTION: Set the value back to 0.

AL-05	***GENERIC ALARM***	The stove is in alarm state; refer to the throubleshooting chapter.
20°C i OFF	***ANOMALY (general)***	The stove has detected an anomaly; refer to the throubleshooting chapter.

Warning Pop-Up

	FLAME	DESCRIPTION
i Adjust RDS system	***RDS SYSTEM ADJUSTMENT REQUEST*** ***(only if the RDS system is provided)***	It shows that the testing procedure and initial parameter calibration have not been completed or have been performed incorrectly. This indication, however, does not block the stove.
20°C	***SERVICE REQUEST***	The threshold value of set work hours has been reached. The symbol displayed remains active throughout the work phase. Non-routine maintenance is required on the stove.
20°C modulate	***AIR FLOW METER FAILURE*** ***(only if the RDS system is provided)***	It shows a failure of the air flow meter and the stove switches to minimum capacity disabling the RDS system.

SIGNALLING	***REASON***	***SOLUTION***
RUN BRAZIER CLEANING (only if the RDS system is provided)	• The door and the ash box are not closed correctly	• Make sure they are properly closed.
	• Poor combustion in grate.	• Switch off the stove, clean the brazier and check the cleanliness of the support bench, clean the tube bundle by activating the turbolators. and adjust the combustion through Pellet/Air settings.
	• Presence of foreign body in air intake tube.	• Check for any foreign body and remove it
	• The air flow meter may be dirty.	**• Clean the flow meter with the stove in "Switched off" state**
		• Contact the Support Service

The appearance of the message "ADJUST THE RDS SYSTEM" indicates that the initial parameter testing procedure and calibration has been unsuccessfully. This indication does not block the stove.

Alarms (table with reference codes)

TRIAL	TITLE	REASON	SOLUTION
AL 01	BLACK OUT	- No voltage during work phase	- Press the switch off key and switch on boiler switch-on.
			- If the problem persists, contact the Support Service
AL 02	FUME PROBE	- The fume probe is malfunctioning	- Contact the Support Service
		- The fume probe is disconnected from the electronic board	- Contact the Support Service
AL 03	FUME OVERTEMP.	- Combustion in the brazier is not optimal due to clogging or obstructions of internal stove ducts	- Switch off the stove, clean the brazier and the tube bundle and adjust the combustion setting the Pellet/Air values
		- The tangential fan (if provided) is malfunctioning or damaged	- Contact the Support Service
			- If the problem persists, contact the Support Service
AL 04	FUME EXHAUST DAMAGED	- Fume exhaust encoder is not working or is connected incorrectly	- Contact the Support Service
		- No power to fume exhaust system	- Contact the Support Service
		- The fume exhaust system is blocked	- Contact the Support Service

AL 05	NO SWITCH-ON	- The pellet tank is empty	- Check for the presence of pellets in the container. Top up, if necessary.
		- Pellet calibration and suction during switch on phase is incorrect.	- Contact the Support Service
		- The igntition coil is faulty or positioned	- Contact the Support Service
AL 06	PELLETS FINISHED	- The pellet tank is empty.	- Check for the presence of pellets in the container. Top up, if necessary.
		- The gear motor is not loading pellets	- Empty the tank to see if there are any objects inside that may prevent the proper operation of the auger.
		- Not enough pellets loaded	- Regulate pellets setting from “SET AIR/PELLETS”
			- If the problem persists, contact the Support Service Support
AL 07	RESET THERMAL BREAKER / PELLET DOOR OR GATE OPEN	- The manual reset thermostat has tripped connected to the hopper (RESET THERMAL BREAKER / Pellet door or gate is open	- Reset the thermostat by pressing the button on the back of the stove or close the doors.
		- Combustion in the grate is not optimal due to the fact that the grate is clogged or the inner stove ducts are clogged. (RESET THERMAL BREAKER)	- Switch off the stove, clean the brazier and the tube bundle and adjust the combustion setting the Pellet/Air values
			- Contact the Support Service
AL 08	DEPRESSURIZATION	- The flue is blocked.	Check the flue is free and clean
		- The vacuum meter is faulty.	- Contact the Support Service
AL 12	FUME EXHAUST SYSTEM FAILURE	- T he fume exhaust system has a loss of performance due to fan obstruction or voltage drop.	- Contact the Support Service
AL 14	SCREW PHASE	- No cable connection to power the gear motor of the auger	- Contact the Support Service
AL 15	AUGER TRIAC	- An internal part of the electronic board that controls the pellet infeed screw is faulty.	- Contact the Support Service
		- Possible voltage drops or incorrect input voltage stove inlet	- Check the mains voltage.
AL 17	NO FLOW ***(only if the RDS system is provided)***	- The flow meter does not measure inlet air flow	- Check if the ash pan and door are closed correctly and check if the air inlet pipe is obstructed.
			- If the problem persists, contact the Support Service

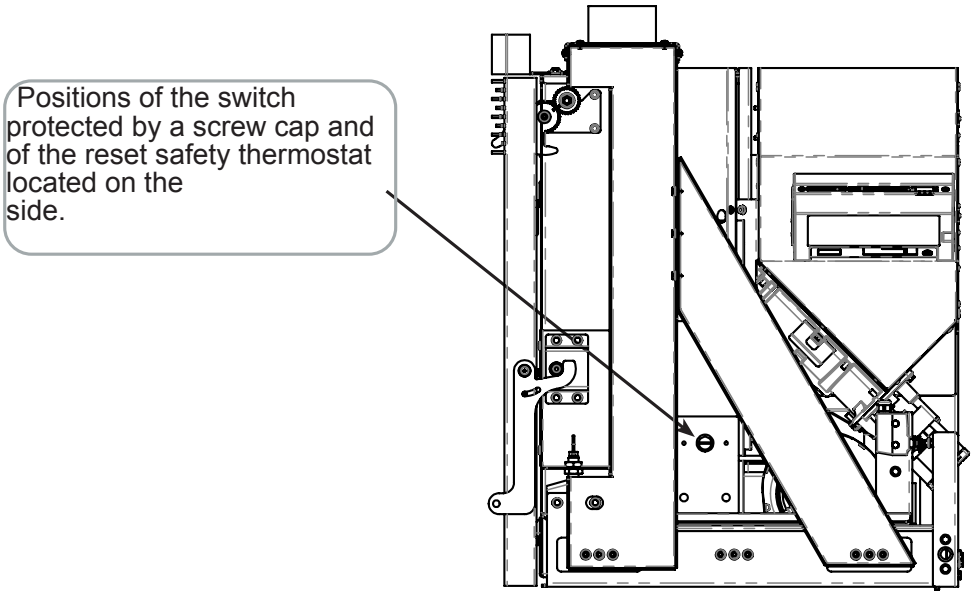

MAINTENANCE

Safety warnings for maintenance

Maintenance of the stove must be performed at least once a year and should be planned in advance with the Technical Assistance Service.

In some conditions, such as turning the stove on and off or inappropriate use, the combustion products can contain small soot particles that build up in the smoke evacuation system. This can reduce the cross-section of the smoke duct and pose a fire risk.
The smoke evacuation system must be inspected and cleaned at least once a year.

The maintenance operations must be carried out when the stove is cold and with the electrical power supply disconnected.

Before completing any maintenance operation, adopt the following precautions:
- Make sure that all stove parts are cold.
- Make sure that the ashes are completely cold.
- Always operate with equipment that is appropriate for maintenance.
- When maintenance is finished, re-install all of the dis-assembled parts before restarting operation.

! IMPORTANT **The quality of the pellet, the stove operating mode and combustion control can affect maintenance activity frequency.**

Cleaning

! IMPORTANT **Perform the cleaning operations so as to guarantee correct stove operation. The table below lists the necessary cleaning operations required for correct stove operation.**

PARTS / FREQUENCY	1 DAY	2-3 DAYS	60-90 DAYS
Combustion chamber	•		
Combustion grille	•		
Ash drawer	•		
Glass		•	
Extraction duct			•

Glass cleaning
With a cold stove, clean the glass with a cloth and glass cleaner.
Note: there are stove glass cleaning products available on the market.

Combustion chamber cleaning
To clean the ash drawer, proceed as follows:

step	action
1	The stove requires a simple yet frequent cleaning in order to guarantee suitable yield and regular operation. Vacuum the combustion chamber every day using a bin ash vacuum, making sure that the ashes are completely cold.

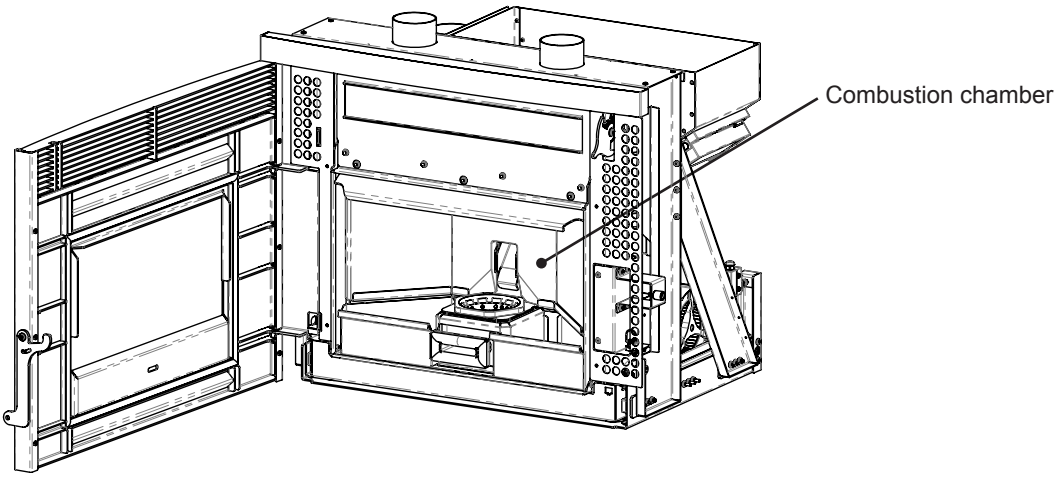

Cleaning the ash drawer

The ash drawer must be cleaned every 30 days, (depending on the amount of time the stove is used and what type of pellet is used).
To clean the ash drawer, proceed as follows:

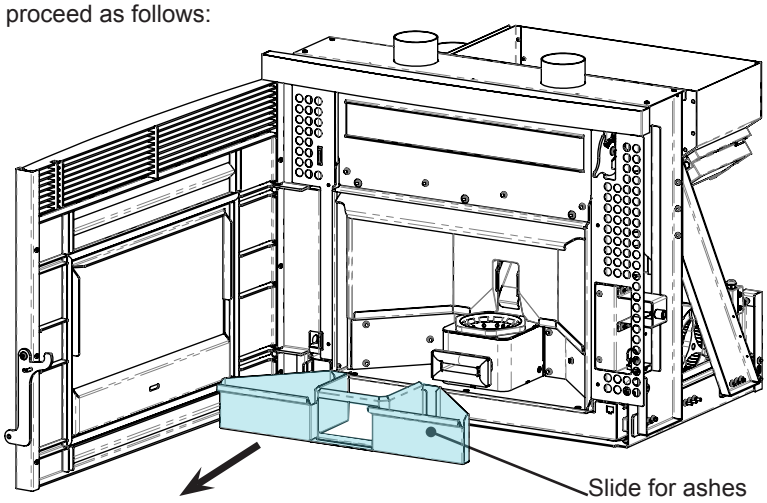

Cleaning the pellet tank

To clean the pellet tank, proceed as follows:

step	action
1	Periodically remove the wood sawdust accumulated on the bottom of the tank, using a vacuum cleaner.

Smoke conduit cleaning

! IMPORTANT

This operation must be carried out by a Ravelli Assistance Centre.
Schedule this type of cleaning with the Ravelli Assistance Centre.
The smoke conduit must be cleaned every 3 months.

step	action
1	Open the hatches.
2	Clean the ashes, eventually use a brush or similar and reassemble everything. Note: the hatches are equipped with gaskets, therefore, before reassembling them, make sure that the gaskets are not worn.

Note: The operation must be carried out with a cold stove, using an ash-type aspirator.

Extraordinary maintenance

Extraordinary maintenance activities must be carried out by staff from the Authorised Assistance Centre.

Do not wait for components to be deteriorated by use before proceeding with their replacement. Replace a worn component before it is completely broken to prevent any damage caused by sudden component breakage.

PARTS / FREQUENCY	60- 90 DAYS	1 SEASON
Inspection hatch	●	
Deep combustion chamber cleaning	●	
Door gasket		●
Chimney		●

Schedule the above extraordinary maintenance activities with the Authorised Assistance Centre.

Deep combustion chamber cleaning

! IMPORTANT

This operation must be carried out by a Ravelli Assistance Centre.
Schedule this type of cleaning with the Ravelli Assistance Centre.

To clean the combustion chamber, proceed as follows:
1- Remove the vermiculite stop

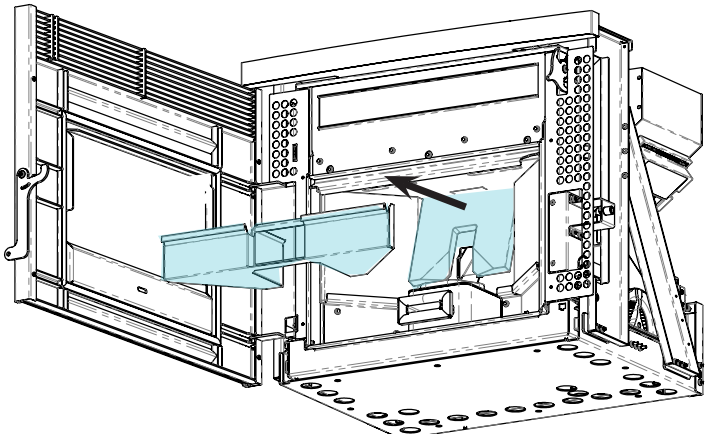

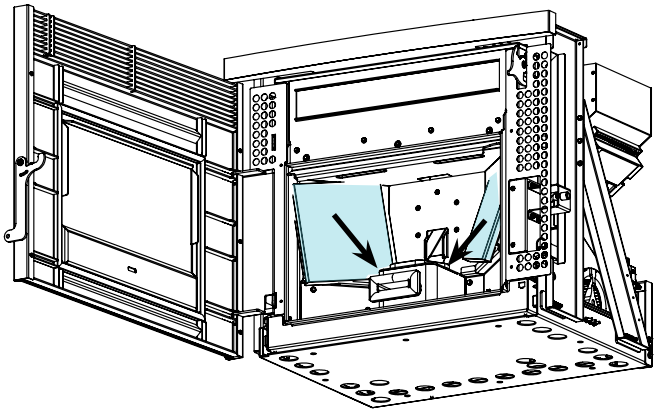

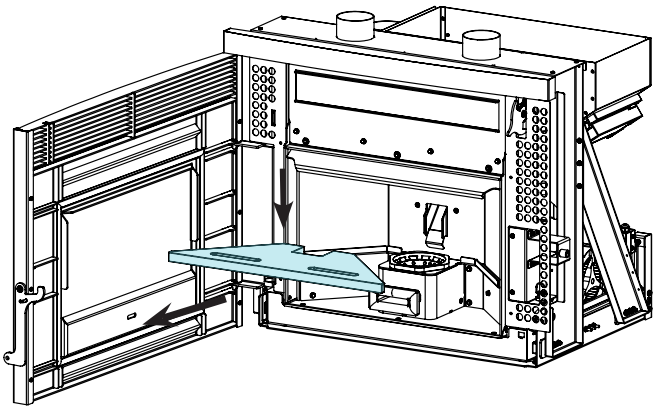

2-Deep cleaning

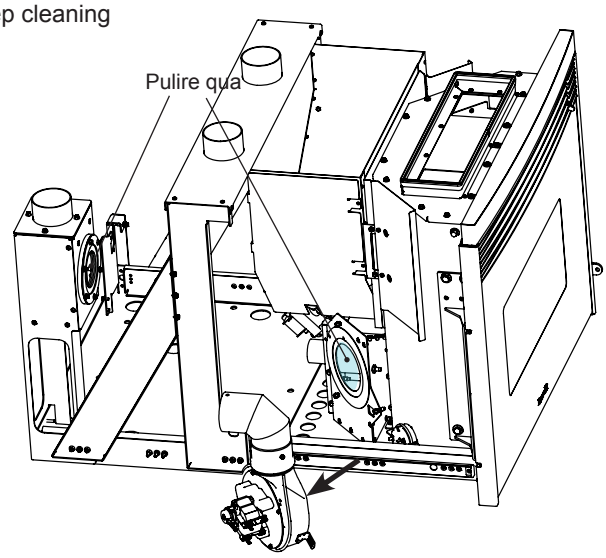

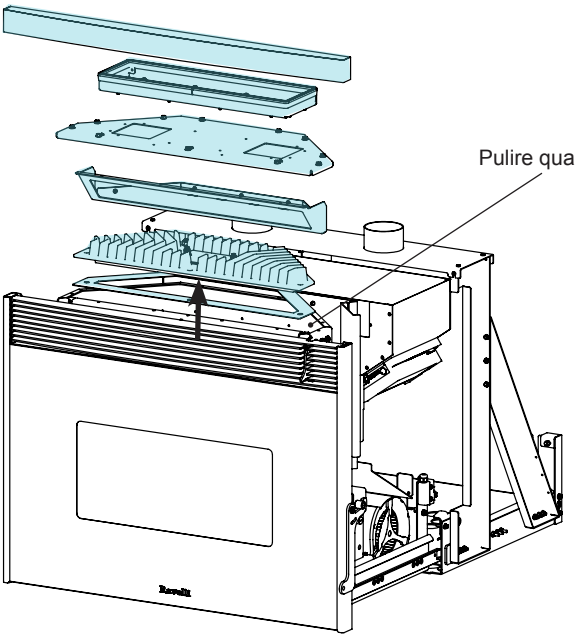

Smoke conduit cleaning

! IMPORTANT

This operation must be carried out by a Ravelli Assistance Centre.
Schedule this type of cleaning with the Ravelli Assistance Centre.
The smoke conduit must be cleaned every 3 months.

step	action
1	Open the hatches.
2	Clean the ashes, eventually use a brush or similar and reassemble everything. Note: the hatches are equipped with gaskets, therefore, before reassembling them, make sure that the gaskets are not worn.

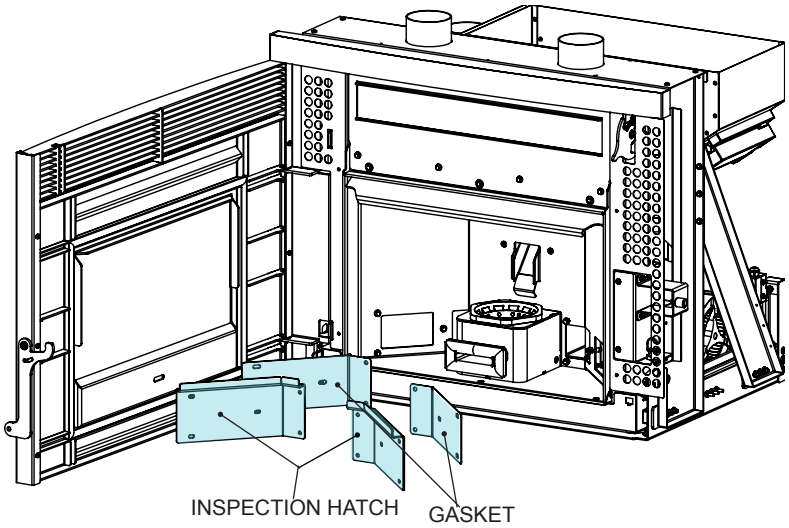

Note: The operation must be carried out with a cold stove, using an ash-type aspirator.

STORAGE AND DISPOSAL

Disposal
Demolition and disposal of the stove is under the exclusive liability and responsibility of the owner who must do so in accordance with the laws in force in the country of installation pertaining to safety, respect and protection of the environment.
At the end of its service life, the product must not be disposed of as household waste. It can be taken to designated separate waste collection centres run by local administrations or to dealers who offer this service.
Disposing of the product as sorted waste avoids any negative consequences on the environment and health deriving from unsuitable disposal and it recovers the materials that the stove is composed of in order to save considerable energy and resources.

TROUBLESHOOTING

The stove does not work
- closely follow the directions in the dedicated chapter of this manual.
- make sure that the air intake duct is not obstructed;
- make sure that the smoke evacuation system is clean and not obstructed;
- make sure the chimney is sized for the stove power;
- make sure that the air intake in the room is clear of any obstructions and that there are no other combustion appliances or extraction hoods that create a vacuum in the room;

Difficult lighting
- closely follow the directions in the dedicated chapter of this manual;
- make sure that the air intake duct is not obstructed;
- make sure that the smoke evacuation system is clean and not obstructed;
- make sure the chimney is sized for the stove power.
- make sure that the air intake in the room is clear of any obstructions and that there are no other combustion appliances or extraction hoods creating a vacuum in the room.

Smoke leakage
- Check the draught of the chimney.
- Check whether the seals on the door, drawer and smoke evacuation system are intact.
- Make sure there is no ash obstructing the primary air flow grille.

The glass gets dirty easily
- Only use recommended fuels.
- Check the draught of the chimney.

Downtime (end of season)
At the end of every season we recommend vacuuming out any ash and dust that may still be inside.

TECHNICAL DATA
(in accordance with EN16510-1:2022, EN16510-2-6:2022)

		UNIT OF MEASURE	RBV 8012 Compact
Type	Product classification		BE
	Environmental quality class	⭐	5
	Energy efficiency class		A+
EEI	Energy efficiency index		123
	Fuel	Wood pellets Ø6	
P_{in}	Power introduced Red. - Nom.	kW	3,2 - 11,6
P_{part} - P_{nom}	Power output Red. - Nom.	kW	3,0 - 10,2
η_{part} - η_{nom}	Efficiency Red. - Nom.	%	93 - 88
	Hourly pellet consumption Red. - Nom.	kg/h	0,68 -2,45
	Autonomy min. - max.	h	8 - 30
	Heating volume *	m3	185 -290
CO_{part} - CO_{nom}	CO at 13% di O2	mg/m3	257 - 49
OGC_{part} - OGC_{nom}	OGC at 13% O2	mg/m3	4 - 2
$NO_{x\ part}$ - $NO_{x\ nom}$	NOX at 13% O2	mg/m3	61 -76
PM_{part} - PM_{nom}	PM at 13% O2	mg/m3	16 - 11
$T_{s\ part}$	Flue gas temperature Red.	°C	85
$T_{s\ nom}$	Temperature in the flue pipe at nominal output	°C	181
T_{class}	Minimum chimney designation		T200 G
m_{chim}	Maximum flue load that the stove can support	kg	0
$Ø_{f,g\ part}$ - $Ø_{f,g\ nom}$	Flue flow rate	g/s	4 - 8
p_{part} - p_{nom}	Min. draught	Pa	10 - 11
E, f	Power supply	V - Hz	230 - 50
W_{max}	Max. electrical power consumption	W	420
el_{min} - el_{max}	Electrical power in operation Red. - Nom.	kW	0,048 - 0,090
el_{SB}	Electric power in stand-by	KW	0,002
d_{in}	Ø combustion air intake pipe	mm	48
d_{out}	Ø smoke outlet pipe	mm	80
	Tank capacity	kg	20
η_s	Seasonal energy efficiency	%	83
CON/INT	Continuous operation (CON) / Intermittent operation (INT)	CON	
	Type of room temperature control	With electronic room temperature control and weekly timer	
	Other control options	With remote control option	

The data shown are indicative and not binding and may vary depending on the type of pellet used. Ravelli reserves the right to make any changes in order to improve product performance.
* Values calculated for an average insulated building (35 W/m3, Climate Zone E) and for a non-insulated building (55 W/m3, Climate Zone E).

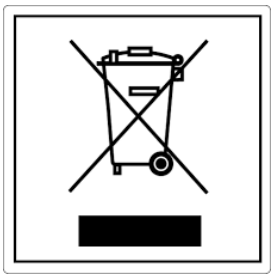

ITA-Informazioni per la gestione di rifiuti di apparecchiature elettriche ed elettroniche contenenti pile e accumulatori
Questo simbolo che appare sul prodotto, sulle pile, sugli accumulatori oppure sulla loro confezione o sulla loro documentazione, indica che il prodotto e le pile o gli accumulatori inclusi al termine del ciclo di vita utile non devono essere raccolti, recuperati o smaltiti assieme ai rifiuti domestici.
Una gestione impropria dei rifiuti di apparecchiature elettriche ed elettroniche, di pile o accumulatori può causare il rilascio di sostanze pericolose contenute nei prodotti. Allo scopo di evitare eventuali danni all'ambiente o alla salute, si invita l'utilizzatore a separare questa apparecchiatura, e/o le pile o accumulatori inclusi, da altri tipi di rifiuti e di consegnarla al centro comunale di raccolta. È possibile richiedere al distributore il ritiro del rifiuto di apparecchiatura elettrica ed elettronica alle condizioni e secondo le modalità previste dal D.Lgs. 49/2014.
La raccolta separata e il corretto trattamento delle apparecchiature elettriche ed elettroniche, delle pile e degli accumulatori favoriscono la conservazione delle risorse naturali, il rispetto dell'ambiente e assicurano la tutela della salute.
Per ulteriori informazioni sui centri di raccolta dei rifiuti di apparecchiature elettriche ed elettroniche, di pile e accumulatori è necessario rivolgersi alle Autorità pubbliche competenti al rilascio delle autorizzazioni.

ENG-Information for management of electric and electronic appliance waste containing batteries or accumulators
This symbol, which is used on the product, batteries, accumulators or on the packaging or documents, means that at the end of its useful life, this product, the batteries and the accumulators included must not be collected, recycled or disposed of together with domestic waste.
Improper management of electric or electronic waste or batteries or accumulators can lead to the leakage of hazardous substances contained in the product. For the purpose of preventing damage to health or the environment, users are kindly asked to separate this equipment and/or batteries or accumulators included from other types of waste and to arrange for disposal by the municipal waste service It is possible to ask your local dealer to collect the waste electric or electronic appliance under the conditions and following the methods provided by national laws transposing the Directive 2012/19/EU.
Separate waste collection and recycling of unused electric and electronic equipment, batteries and accumulators helps to save natural resources and to guarantee that this waste is processed in a manner that is safe for health and the environment.
For more information about how to collect electric and electronic equipment and appliances, batteries and accumulators, please contact your local Council or Public Authority competent to issue the relevant permits.

FRA-Informations relatives à la gestion des déchets d'appareils électriques et électroniques contenant des piles et des accumulateurs
Ce symbole présent sur le produit, sur les piles, sur les accumulateurs, sur l'emballage ou sur la documentation de référence, indique que le produit et les piles ou les accumulateurs ne doivent pas être collectés, récupérés ou éliminés avec les déchets domestiques au terme de leur vie utile.
Une gestion impropre des déchets d'équipements électriques et électroniques, des piles ou des accumulateurs peut causer la libération de substances dangereuses contenues dans les produits. Pour éviter d'éventuelles atteintes à l'environnement ou à la santé, on invite l'utilisateur à séparer cet appareil, et / ou les piles ou les accumulateurs, des autres types de déchets et de le confier au service municipal de collecte. On peut demander au distributeur de prélever le déchet d'appareil électrique ou électronique aux conditions et suivant les modalités prévues par les normes nationales de transposition de la Directive 2012/19/UE.
La collecte sélective et le traitement correct des appareils électriques et électroniques, des piles et des accumulateurs, favorisent la conservation des ressources naturelles, le respect de l'environnement et assurent la protection de la santé.
Pour tout renseignement complémentaire sur les modalités de collecte des déchets d'appareils électriques et électroniques, des piles et des accumulateurs, il faut s'adresser aux Communes ou aux Autorités publiques compétentes pour la délivrance des autorisations.

NLD-Informatie voor het beheer van afgedankte elektrische en elektronische apparatuur die batterijen en accu's bevat
Dit symbool, dat op het product, op batterijen, op accu's, op de verpakking of in de documentatie ervan staat, geeft aan dat het product en de batterijen of accu's aan het einde van de gebruiksduur niet samen met het huishoudelijke afval mogen worden ingezameld of verwijderd.
Een onjuist beheer van afgedankte elektrische en elektronische apparatuur, batterijen of accu's kan leiden tot het vrijkomen van gevaarlijke stoffen in de producten. Om schade aan het milieu of aan de gezondheid te voorkomen, wordt de gebruiker aangemoedigd om deze apparatuur en/of de meegeleverde batterijen of accu's van andere soorten afval te scheiden en af te leveren aan de gemeentelijke ophaaldienst. Het is mogelijk om de distributeur te vragen om de afvalinzameling van elektrische en elektronische apparatuur uit te voeren volgens de voorwaarden en de voorschriften die zijn vastgelegd in de nationale bepalingen ter uitvoering van Richtlijn 2012/19/EU.
De gescheiden inzameling en correcte behandeling van elektrische en elektronische apparatuur, batterijen en accu's bevorderen het behoud van natuurlijke hulpbronnen, respect voor het milieu en zorgen voor de bescherming van de gezondheid.
Voor meer informatie over de inzameling van afgedankte elektrische en elektronische apparatuur, batterijen en accu's is het noodzakelijk om contact op te nemen met de gemeenten of de bevoegde overheidsinstanties.

DEU-Informationen für die Entsorgung von elektrischen und elektronischen Altgeräten, die Batterien und Akkus enthalten
Dieses Symbol auf dem Produkt, auf den Batterien, auf den Akkus, auf deren Verpackung oder in deren Unterlagen weist darauf hin, dass das Produkt und die Batterien oder Akkus am Ende ihrer Lebensdauer nicht zusammen mit dem normalen Hausmüll gesammelt, verwertet oder entsorgt werden dürfen.
Eine unsachgemäße Entsorgung von elektrischen und elektronischen Altgeräten, sowie von Batterien oder Akkus kann zur Freisetzung gefährlicher Stoffe im Produkt führen. Um mögliche Umwelt- oder Gesundheitsschäden zu vermeiden, wird der Benutzer aufgefordert, dieses Gerät bzw. die Batterien oder Akkus von anderen Abfallarten zu trennen und der kommunalen Sammelstelle zu übergeben. Außerdem ist es möglich, den Händler um die Rücknahme der elektrischen und elektronischen Altgeräte unter den in den nationalen Vorschriften zur Umsetzung der Richtlinie 2012/19/EU vorgesehenen Bedingungen zu bitten.
Die getrennte Sammlung und die ordnungsgemäße Verwertung von elektrischen und elektronischen Altgeräten, Batterien und Akkus fördert die Erhaltung der natürlichen Ressourcen, respektiert die Umwelt und gewährleistet den Schutz der Gesundheit.
Für weitere Informationen zur Sammlung von elektrischen und elektronischen Altgeräten, Batterien und Akkus wenden Sie sich bitte an die für die Erteilung von Genehmigungen zuständigen Kommunen oder Behörden.

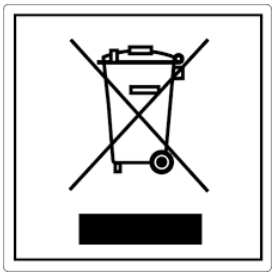

ESP-Información para la gestión de residuos de aparatos eléctricos y electrónicos con pilas y acumuladores
Este símbolo que aparece en el producto, en las pilas, los acumuladores o en su embalaje o su documentación indica que el producto y las pilas o acumuladores que contiene, al final de su vida útil, no deben recogerse, recuperarse o desecharse junto con los residuos domésticos.
Una gestión inadecuada de los residuos de aparatos eléctricos y electrónicos, pilas o acumuladores podría provocar la liberación de sustancias peligrosas contenidas en los productos. Para evitar posibles daños para el medio ambiente o la salud, se recomienda al usuario que separe este aparato y/o las pilas o acumuladores que contiene de otros tipos de residuos y lo entregue al servicio municipal encargado de la recogida. Se puede solicitar al distribuidor la recogida de los residuos de aparatos eléctricos y electrónicos en las condiciones y de acuerdo con las modalidades establecidas por las normas nacionales de transposición de la Directiva 2012/19/UE.
La recogida diferenciada y el tratamiento correcto de los aparatos eléctricos y electrónicos, de las pilas y los acumuladores favorecen la conservación de los recursos naturales, el respeto del medio ambiente y garantizan la protección de la salud.
Para obtener más información sobre las modalidades de recogida de los residuos de aparatos eléctricos y electrónicos, de las pilas y los acumuladores es necesario acudir a los ayuntamientos o las autoridades públicas competentes para la concesión de autorizaciones.

PRT-Informações sobre a gestão dos resíduos de equipamentos elétricos e eletrónicos contendo pilhas e acumuladores
Este símbolo no produto, pilhas, acumuladores ou respetiva embalagem ou documentação indica que, no final do seu ciclo de vida útil, o produto e as pilhas ou acumuladores incluídos não devem ser recolhidos, recuperados nem eliminados conjuntamente com o lixo doméstico.
Uma gestão imprópria dos resíduos de equipamentos elétricos e eletrónicos, pilhas ou acumuladores pode causar a libertação de substâncias perigosas contidas nos produtos. A fim de evitar eventuais danos para o ambiente ou para a saúde, o utilizador é convidado a separar este equipamento e/ou pilhas ou acumuladores incluídos de outros tipos de resíduos e a depositá-los no serviço municipal de recolha de lixo. É possível requisitar a recolha dos resíduos de equipamentos elétricos e eletrónicos pelo distribuidor segundo as condições e modalidades previstas pelas normas nacionais de transposição da diretiva 2012/19/UE.
A recolha separada e o correto tratamento dos equipamentos elétricos e eletrónicos e respetivas pilhas e acumuladores favorecem a conservação dos recursos naturais, o respeito do ambiente e a proteção da saúde.
Para mais informações sobre as modalidades de recolha dos resíduos de equipamentos elétricos e eletrónicos, pilhas e acumuladores, dirija-se à sua Câmara Municipal ou à autoridade pública competente para a emissão das autorizações.

GRC-Πληροφορίες για τη διαχείριση αποβλήτων ηλεκτρικού και ηλεκτρονικού εξοπλισμού, μπαταριών και συσσωρευτών
Αυτό το σύμβολο που εμφανίζεται στο προϊόν, στις μπαταρίες, στους συσσωρευτές στη συσκευασία ή στα έγγραφα υποδεικνύει ότι το προϊόν στο τέλος της ωφέλιμης ζωής του δεν πρέπει να συλλέγεται, να ανασύρεται ή να απορρίπτεται με τα οικιακά απορρίμματα.
Ο ακατάλληλος χειρισμός των αποβλήτων ηλεκτρικού και ηλεκτρονικού εξοπλισμού, μπαταρίες ή συσσωρευτές μπορεί να οδηγήσει στην απελευθέρωση επικίνδυνων ουσιών που περιέχονται στο προϊόν. Προκειμένου να αποφευχθεί τυχόν μόλυνση στο περιβάλλον ή ασθένεια, ο χρήστης ενθαρρύνεται να διαχωρίσει αυτόν τον εξοπλισμό ή/και τις μπαταρίες ή τους συσσωρευτές που περιλαμβάνονται από άλλα είδη αποβλήτων και να το παραδώσει στην υπηρεσία δημοτικών συλλογών. Είναι δυνατόν να ζητηθεί από τον διανομέα η συλλογή αποβλήτων ηλεκτρικού και ηλεκτρονικού εξοπλισμού που πρέπει να πραγματοποιηθεί σύμφωνα με τους όρους και με τις διαδικασίες που θεσπίζονται από τις εθνικές διατάξεις εφαρμογής της οδηγίας 2012/19/ΕΕ.
Η χωριστή συλλογή και η σωστή επεξεργασία ηλεκτρικού και ηλεκτρονικού εξοπλισμού, μπαταριών και συσσωρευτών ευνοούν τη διατήρηση των φυσικών πόρων, τον σεβασμό για το περιβάλλον και την προστασία της υγείας.
Για περισσότερες πληροφορίες σχετικά με τον τρόπο συλλογής των αποβλήτων ηλεκτρικού και ηλεκτρονικού εξοπλισμού, μπαταριών και συσσωρευτών είναι απαραίτητο να επικοινωνήσετε με τους δήμους ή τις δημόσιες αρχές που είναι αρμόδιες για την έκδοση των αδειών.

DNK-Informationer til behandling af affald fra elektriske og elektroniske udstyr der indeholder batterier og akkumulatorer
Dette symbol, der vises på produktet, på batterierne eller på akkumulatorerne, på indpakningen eller i dokumentationen, angiver at selve produkt, nå dets levetid er opbrugt, ikke skal opsamles, genvindes eller bortskaffes sammen med normalt husholdningsaffald.
En ukorrekt behandling af affald fra elektriske eller elektroniske udstyr, af batterier og akkumulatorer, risikerer at udlede farlige stoffer indeholdt i produktet. For at forebygge ventuelle skader for miljøet eller sundheden, bedes brugeren om at behandle dette udstyr, og/eller de medfølgende batterier eller akkumulatorerne separat fra andre affaldstyper, og at levere det til det kommunale opsamlingscenter, eller at anmode leverandøren om opsamling, i henhold til forskrifterne, der er angivet i de nationale forordninger til gennemførelse af Direktivet 2012/19/EF.
Den separate opsamling og genvinding af de nedslidte elektriske og elektroniske udstyr, af batterierne og af akkumulatorerne, fremmer bevarelsen af de naturlige ressourcer, og sikrer at dette affald behandles ved at tage hensyn til miljøets og sundhedens varetagelse.
Til yderligere informationer angående opsamling af affald fra elektriske og elektroniske udstyr, af batterier og akkumulatorer, er det nødvendigt at rette henvendelse til Kommunerne eller til de ansvarlige myndigheder til udstedelse af bemyndigelserne.

POL-Informacje dotyczące zarządzania odpadami sprzętu elektrycznego i elektronicznego zawierającego baterie i akumulatory
Niniejszy symbol znajdujący się na produkcie, bateriach, akumulatorach, na ich opakowaniu lub na dokumentacji, wskazuje, że produkt, baterie lub akumulatory po zakończeniu okresu użytkowania nie mogą być zbierane, odzyskiwane lub utylizowane wraz z odpadami komunalnymi.
Niewłaściwe postępowanie ze zużytym sprzętem elektrycznym i elektronicznym, bateriami lub akumulatorami może powodować uwolnienie niebezpiecznych substancji zawartych w produktach. Celem uniknięcia jakichkolwiek szkód dla środowiska lub zdrowia, użytkownik proszony jest o odseparowanie niniejszego sprzętu i/lub dołączonych baterii lub akumulatorów od innych rodzajów odpadów i dostarczenia go do miejskiego punktu zbierania odpadów. Możliwe jest zwrócenie się z prośbą do dystrybutora o odebranie odpadów sprzętu elektrycznego i elektronicznego, na warunkach i zgodnie z procedurami ustanowionymi przez przepisy krajowe transponujące dyrektywę 2012/19/UE.
Oddzielna zbiórka i prawidłowe przetwarzanie sprzętu elektrycznego i elektronicznego, baterii i akumulatorów sprzyja ochronie zasobów naturalnych, poszanowaniu środowiska i zapewnieniu ochrony zdrowia.
Aby uzyskać więcej informacji dotyczących zbiórki zużytego sprzętu elektrycznego i elektronicznego, baterii i akumulatorów, należy skontaktować się z władzami miejskimi lub organami publicznymi odpowiedzialnymi za wydawanie zezwoleń.

SVN-Informacije o ravnanju z odpadno električno in elektronsko opremo, ki vsebuje baterije in akumulatorje
Ta simbol, ki se nahaja na izdelku, baterijah, akumulatorjih ali na njihovi embalaži ali v dokumentaciji, označuje, da se po izteku življenjske dobe izdelka ter baterij ali akumulatorjev, ki jih izdelek vsebuje, ne sme zbirati, predelati ali odstranjevati skupaj z odpadki iz gospodinjstev.
Neprimerno ravnanje z odpadno električno in elektronsko opremo, baterijami ali akumulatorji lahko povzroči izpust nevarnih snovi, ki jih vsebujejo izdelki. Da bi preprečili morebitne škodljive vplive na okolje ali zdravje, uporabnike pozivamo, da tovrstno opremo in/ali baterije ali akumulatorje, ki jih oprema vsebuje, ločujejo od drugih vrst odpadkov ter jih oddajo občinski službi za zbiranje odpadkov. Od distributerja lahko zahtevate prevzem odpadne električne in elektronske opreme pod pogoji in na načine, skladno s katerimi je bila Direktiva 2012/19/EU prenesena v nacionalno zakonodajo.
Ločevanje in ustrezna obdelava električnih in elektronskih naprav, baterij in akumulatorjev pripomoreta k ohranjanju naravnih virov, spoštovanju okolja ter zagotavljata varovanje zdravja.
Za dodatne informacije o načinih zbiranja odpadne električne in elektronske opreme, baterij in akumulatorjev se obrnite na občine ali na javne organe, ki so pristojni za izdajanje dovoljenj.

Aico S.r.l.

Headquarter
Via Consorzio Agrario, 3/D - 25032
Chiari (BS) - Italy

Research and Development Centre
Viale del commercio 12/a - 37135
Verona (VR) - Italy

T. + 39 030 7402939
info@ravelligroup.it

FB Ravellifuocointelligente
IG ravellistufe

www.ravelligroup.it

Aico S.r.l. does not assume any responsibility for any errors in this booklet and considers itself free to make any variations to the features of its products without notice.

PNMU00149-EN Rev.0 14/10/2025